PHOTO CD PLAYER CDF 100/00/05/11/17

Service
Service
Service

Interactive
Media
Systems

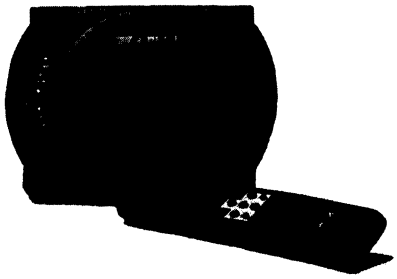

Service Manual

COMPACT disc DIGITAL AUDIO

CONTENTS

1 Detailed table of contents
2 Product information
3 Service information
4 Mechanical drawings and partslist
5 Descriptions
6 The service diagnostics
7 Electrical drawings
8 Diagnostics, measurements and adjustments
9 Personal notes
10 Partslist of mechanical and electrical parts

CDM
These sets are equiped with Compact Disc Mechanism type CDM9. Service information is included in this manual.
Service code 4822 691 30312.

(SF)

Varioitus!
Laite sisältaa laserdiodin, joka lähettää näkymätöntä silmille vaarallista lasersäteilyä.

(GB)

Safety regulations require that the set be restored to its original condition and that parts which are identical with those specified be used.

(S)

Varning!
Osynlig laserstrålning när denna del är öppnad och spärren ar urkopplad. Betakta ej strålen.

(DK)

Advarsel!
Usynlig laserstråling ved abning når sikkerhedsafbrydere er une af funktion. Undgå udsaettelse for stråling.

Photo CD™

CLASS 1
LASER PRODUCT
3122 110 03420

Published by A.V. 1092 Service & Support Interactive Media Systems Printed in The Netherlands ©Copyright reserved Subject to modification 4822 725 24172

PHILIPS

PHILIPS

PCS 67 427

IMPORTANT
This product was FCC certified under test conditions that included use of shielded cables and connectors between system components. It is important that you use shielded cables to reduce the possibility of causing interference to radios, television sets and other electronic devices. If you have any problems contact your dealer.

LASER SAFETY
This unit employs a laser. Do not remove the cover or attempt to service this device when connected to the mains, due to the possibility of eye damage.

CAUTION
USE OF CONTROLS OR ADJUSTMENTS OR PERFORMANCE OF PROCEDURES OTHER THAN THOSE SPECIFIED HEREIN MAY RESULT IN HAZARDOUS LASER RADIATION EXPOSURE.

Important notice:
Make sure before connecting this drive unit to the mains/AC power via the wall adapter,that the voltage used matches the voltage setting of the wall adapter. Refer to the type sticker at the adapter.

CAUTION:
During transport you must ALWAYS use the transport path !!!

Models	Base country	Video.
CDF100/00	Europe	PAL
CDF100/05	United Kingdom	PAL
CDF100/11	Japan	NTSC
CDF100/17	USA	NTSC

1 DETAILED TABLE OF CONTENTS

2 PRODUCT INFORMATION
2.1 Technical specification
2.2 Input voltages
2.3 Remote control system
2.4 Power supply and rechargeable battery pack.

3 SERVICE INFORMATION
3.1 Safety instructions
3.2 Servicing of SMDs (Surface Mounted Devices)
3.2.1 General cautions on handling and storage
3.2.2 Removal of SMDs
3.2.2.1 Caution on removal
3.2.3 Attachment of SMDs
3.2.3.1 Caution on attachment
3.3 Handling ESD sensitive components
3.3.1 Personal safety
3.3.2 Storage and transport
3.3.3 Testing or handling
3.3.4 Mounting ESD sensitive components
3.3.5 Soldering
3.3.6 Electrostatic charges
3.3.7 Transients (switch-on phenomena)
3.3.8 Working environment
3.3.9 Replacement of the Flat Pack I.C.s
3.4 Service tools like testdiscs
3.5 Measuring equipment

4 MECHANICAL DRAWINGS
4.1 Demounting instructions
4.2 Exploded view
4.2.1 Demounting of flex foil CDM-9
4.3 Packaging instructions

5 SHORT DESCRIPTIONS
5.1 Data of components
5.1.1 Compact disc mechanism: CDM-9
5.1.2 Photo diode signal processor TDA 8808
5.1.3 Radial error signal processor TDA 8809
5.1.4 Decoder SAA 7310
5.1.5 Single-bit DAC (bit stream) SAA 7321
5.1.5.1 Bitstream technology information
5.1.6 Compact Disc Blockdecoder CDBD
5.1.7 Eve Video Controller EVC
5.1.8 Explanation of analog video part

6 THE SERVICE DIAGNOSTIC SOFTWARE

7 ELECTRICAL DRAWINGS
7.1 Wiring diagram
7.2 Block diagram
7.3 Circuit diagrams and PCB layouts
7.3.1 Power supply and PCB layouts (two sides)
7.3.2 Servo & decoder panel and PCB layout
7.3.3 Audio/video panel PCB layouts
7.3.4 Audio output part
7.3.5 Digital video part I
7.3.6 Digital video part II
7.3.7 Audio/video panel PCB layouts
7.3.8 Analog video part
7.3.9 Display + I.R. circuit diagrams and PCB layouts

8 DIAGNOSTICS
8.1 Measurements and adjustments
8.2 Trouble shooting/quick diagnostics

9 PERSONAL NOTES

10 PARTSLIST OF MECHANICAL- AND ELECTRICAL PARTS

2 PRODUCT INFORMATION

GENERAL INFORMATION
Within the Photo CD concept, photographic film is scanned, digitally processed and then recorded as a series of images on Photo CD disc. It is also possible to print as high quality color prints.
The recorded images on disc are decoded by a
Photo CD player
CD-I player
CD-ROM XA player
The system is fully prepared to handle multiple applications including CD Audio discs as well as the Photo CD discs.This photo CD-player is a stand alone consumer apparatus that plays audio discs (according to the red book) and photo CD discs. A photo CD disc is a disc conform the CD-ROM XA bridge specification and conform the Atlantic specification. A photo CD can be a single session disc or a multi session disc (= conform the orange book).

2.1 Technical specification

General

Power requirements:	220V-230V 50Hz	Eur
	240V 50Hz	UK
	120V 60Hz	USA
	100V 50/60Hz	Japan
Power Consumption:	about 15 Watts	
Weight:	1.1 Kg	
Dimensions:	220 X 154 X 48 mm	
Operating temperature:	+ 5 C to 35 C	
Humidity range:	5 to 90% (No condensation)	
Safety requirements:	Conformable IEC65	

Connections

Video

Video out (cinch bus):	1 Vpp (75 ohms load)
Y/C (S-VHS) out:	1 Vpp (75 ohms load)(Y) 300 mV pp (75 ohms load) color burst
Signal to Noise ratio:	> 50 dB
Band width:	> 5.0 MHz (PAL) > 4.2 MHz (NTSC)

Audio

Analog output:	2 V rms +/- 2 dB
Signal to noise ratio:	> 90 dB
Dynamic range:	> 85 dB
Channel separation:	> 85 dB
Total Harmonic Distortion:	< 85 dB

Interfaces: 8-pin mini-Din A/V connector, audio line out, headphone out, RC5 infra red remote control receiver, wall adapter (8.8 V DC input).

2.2 Input voltages

The wall adapters for the photo CD players are fully functional with voltage variations of +/- 10% from nominal line voltage.
Players for the North American market have nominal line voltages of 120 V AC.
Players for the European market place have nominal line voltages of 220 V AC/230 V AC.
Players for the United Kingdom have nominal line voltages of 240 V AC.
Players intended for the Japanese market place have nominal line voltages of 100 V AC.

2.3 Remote control system

The players use an IR remote transmitter which has functions commensurate with the features of the model; it uses the RC-5 remote system.

The transmitter uses 2 AAA LeClanche cells. Normal user cell life is expected to be in excess of 2 years. The transmitter has a useable range of 10 meters.

2.4 Power supply and rechargeable battery pack.

The powersupply has a short circuit protection and a rechargeable circuit for a battery pack.
To switch on the powersupply the input voltage via wall adapter or battery pack must be higher than 4.4 Volts and the on/off switch must be switched on.
The nominal voltage of the wall adapter is 8.8 Volts; the charging current is 150 mA during 12 h.

CAUTION: During transport you must always use the transport path !!!

3.1 SAFETY INSTRUCTIONS

- Safety regulations demand that the set be restored to its original condition and that components identical with the original types be used.
  Safety components are marked by the symbol ▲.
- **ESD**

  All IC's and many other semi-conductors are susceptible to electrostatic discharges (ESD). Careless handling during repair can reduce life drastically.
  When repairing, make sure that you are connected with the same potential as the mass of the set via a wrist wrap with resistance.
  Keep components and tools also at this potential.
  For detailed information see "Handling ESD-sensitive components".
- A set to be repaired should always be connected to the mains via a suitable isolating transformer.
- never replace any modules or any other parts while the set is switched on.
- Use plastic instead of metal alignment tools. This in order to prelude short-circuit or to prevent a specific circuit form being rendered unstable.

3.2 SERVICING OF SMDs (Surface Mounted Devices)

3.2.1 General cautions on handling and storage

a. Oxidation on the SMDs terminals results in poor soldering. Do not handle SMDs with bare hand.
b. Avoid for storage places that are sensitive to oxidation such as places with sulfur or chlorine gas, direct sunlight, high temperatures or a high degree of humidity.
   As a result the capacitance or resistance value of the SMDs may be affected.
c. Rough handling of circuit boards containing SMDs may cause damage to the components as well as the circuit boards. Circuit boards containing SMDs should never be bent or flexed. Different circuit board materials expand and contract at different rates when heated or cooled and the components and/or solder connections may be damaged due to the stress.
   Never rub or scrape chip components as this may cause the value of the component to change. Similary, do not slide the circuit board across any surface.

3.2.2 Removal of SMDs

a. Heat the solder (for 2-3 seconds) at each terminal of the chip. Small components can, by means of litz wire and a limited horizontal force, be removed with the soldering iron. They can also be removed with a solder sucker (see Fig. 1a) or
b. While holding the SMD with a pair of tweezers take it off gently using th soldering iron's heat applied to each terminal (see Fig. 1b).
c. Remove the excess solder on the solder lands by means of litz wire or a solder sucker (see Fig. 1c).

3.2.2.1 Caution on removal:

a. When handling the soldering iron, use suitable pressure and be careful.
b. When removing the chip, do not use undue force with the pair of tweezers.
c. The soldering iron to be used (approx. 30 W), must preferably be provided with a thermal control (soldering temperature about 225 to 250°C).
d The chip, once removed, must **never** be used again.

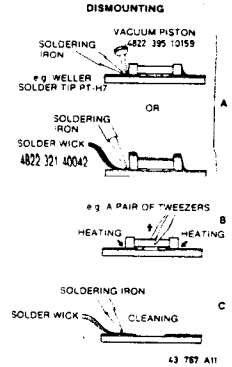

Fig. 1

3.2.3 Attachment of SMDs

a. Locate the SMD on the solder lands by means of tweezers and solder the component at one side. Ensure that the component is positioned well on the solder lands (see Fig. 2a).
b. Next complete te soldering of the terminals of the component (see Fig. 2b).

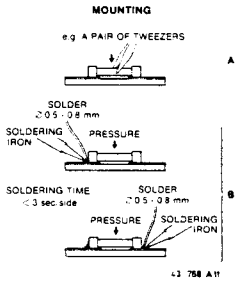

Fig. 2

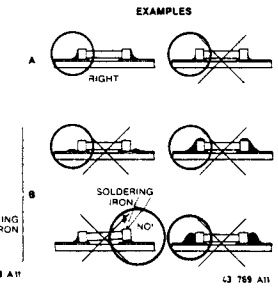

Fig. 3

3.2.3.1 Caution on attachment:

a. When soldering the SMD terminals, do not touch them directly with the soldering iron. The soldering must be as quick as possible; care must be taken to avoid damage to the terminals and the body itself.
b. Keep the SMD's body in contact with the printed board when soldering.
c. The soldering iron to be used (approx. 30 W) must preferably be provided with a thermal control (soldering temperature about 225 to 250°C).
d. Soldering should not be done outside the solder land.
e. Soldering flux (of rosin) may be used but should not be acidic.
f. After soldering, let the SMD cool down gradually at room temperature.
g. The quantity of solder must be proportional with the size of the solder land. If the quantity is too great, the SMD might crack or the solder lands might be torn loose from the printed board (see Fig. 3).

3.3 HANDLING ESD-SENSITIVE COMPONENTS

3.3.1 Personal safety

The testing, handling and replacing of ESD-sensitve components requires special attention for personal safety. A person dealing with ESD-sensitive components should, normally speaking, be connected via a resistance to the same potential as the chassis of the set to protect him against direct contact with the supply voltage.
This resistance is often applied in the connection lead of wrist wraps. If necessary, make use of an isolating transformer.

3.3.2 Storage and transport

Transport and store the circuits and PCBs in their original packages.
As an alternative to the original package one may use a conductive material or special IC package which short-circuits all the pins of the component with one another.
Always discharge the package before opening it.

3.3.3 Testing or handling

Work on a conductive surface when testing loose circuits and components or when transferring components and circuits from one package to another.
Use a conductive wrist wrap with lead to make an electrical connection between the conductive surface and yourself via a resistance in the connection lead of the wrist wrap.
Connect equipment and tools also with this conductive surface.
Do not connect any signals to inputs as long as the power supply of the set to be tested is off.
All the inputs that are not used should be connected either to ground or to the supply voltage. When testing, do not use any freon sprays for under-cooling of sensitive components.

3.3.4 Mounting ESD-sensitive components

Mount ESD-sensitive components only after all other components have been mounted.
Make sure that the components themselves, the metal parts of the PCB, mounting equipment and mounting operator are at the same potential level as the chassis of the set.
If it is impossible to ground the PCB, the mounting operator should pick the PCB up before bringing it into contact with the components to be replaced.

3.3.5 Soldering

Soldering iron tips, also those of low-voltage soldering stations, should be kept at the same potential as the components and the PCB.
It is better to use solder-removing braid than solder suckers.

3.3.6 Electrostatic charges

One should stick to the precautionary measures also after the ESD-sensitive components have been mounted on the PCB. Until the sub-PCBs have been incorporated into a complete system on which the correct supply voltages are connected, the PCB is nothing more than an extension of the conductors of the components on this PCB. To prevent electrostatic discharges from passing to the components via the terminals, we recommend that you apply conductive clips or conductive tape on the terminals of the PCB.

3.3.7 Transients (switch-on phenomena)

To prevent permanent damages as a result of switch-on phenomena, no ESD-sensitive components, or PCBs populated with these components, should be inserted in or removed from test-sockets or systems with the supply voltage on.
Prevent switching peeks on the mains as a consequence of switching electric equipment, relay and DC lines on and off.

3.3.8 Working environment

The work bench for the service technician should look like the one shown in the figure.

3.3.9 Replacement of the Flat Pack IC's

For replacing a component see Fig. 6 Dismounting and Mounting. Also a number of precautions and examples is given.
When replacing a flat pack, rosin flux applied to the device leads will ensure a good soldered joint.
Since rosin flux, when not properly heated by the soldering process, is sticky, it will attract dust which will result in component degeneration over a period of time.
The removal of excess flux with a cleaner will not solve this problem because the flux is then even spread over a greater area by the cleaner. Drying of the flux can be accomplished by blowing the area with a common hair dryer for 1 or 2 minutes at a distance of approx. 10 centimeters.

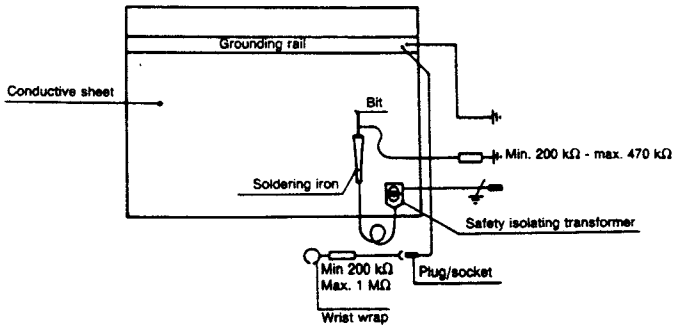

Special attention should be paid in regions having a dry atmosphere and when the floor is covered with a nylon carpet or such.

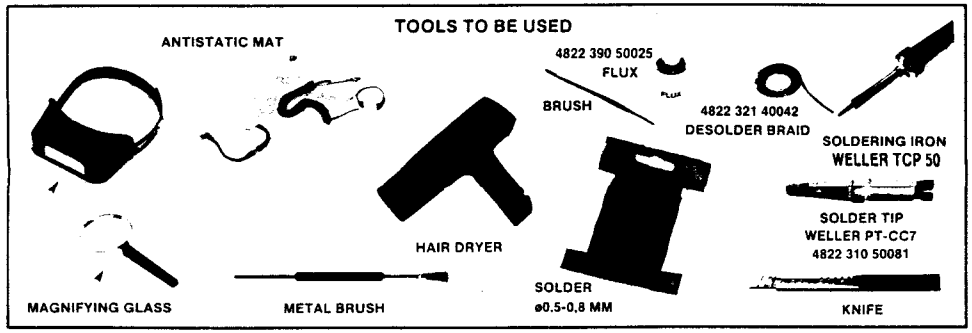

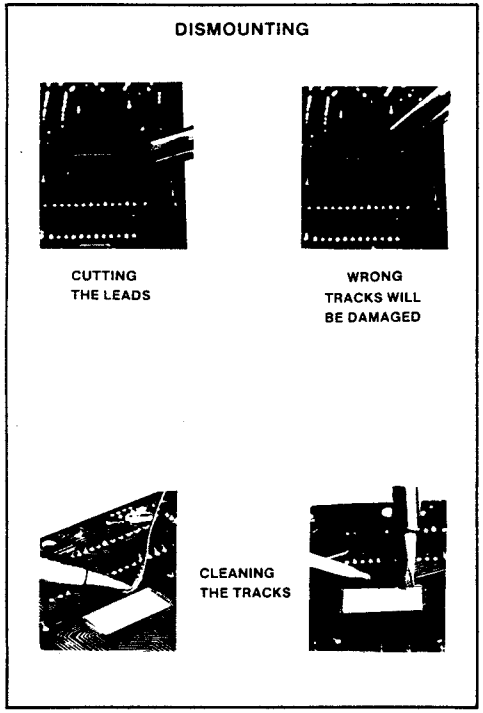

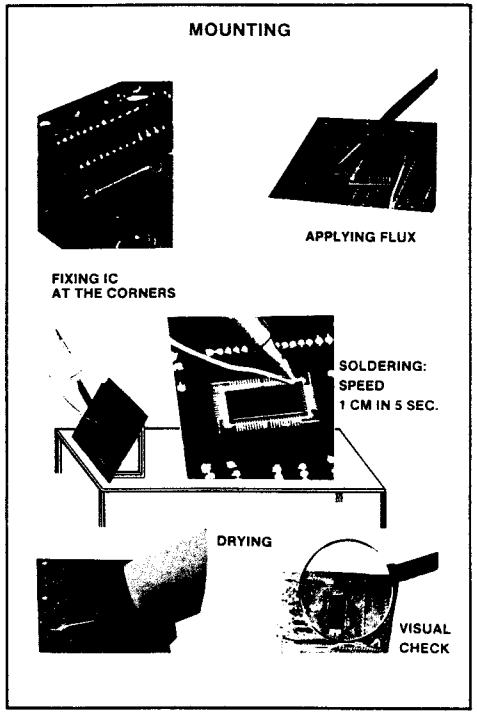

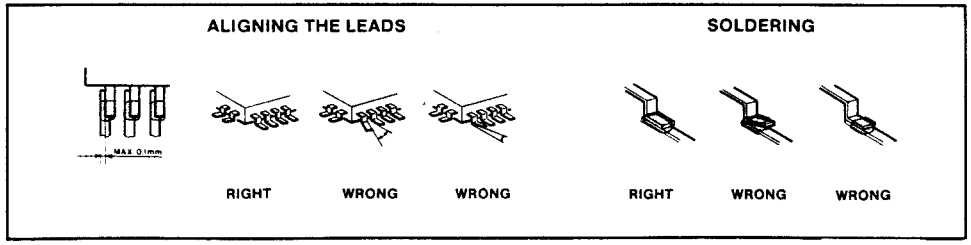

CODENUMBERS FOR STANDARDIZED RESISTORS

Unless otherwise specified, all defective resistors in the circuits of the set can be replaced by standardizes types, mentioned in this chapter.

VR25, VR37 high-ohmic/high -voltage resistors

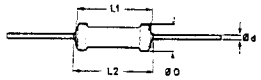

type	D_{max}	$L_{1\,max}$	$L_{2\,max}$	d
VR25	2,5	6,5	7,5	0,6

type	D_{max}	$L_{1\,max}$	$L_{2\,max}$	d
VR37	3.7	9.0	10.0	0.7

Range VR25 : 100 KΩ to 22 MΩ
Range VR37 : 100 KΩ to 33 MΩ

Composition of the service number for the VR25 and VR37
Main subgroup: 4822 053 20... and 4822 053 21...

The codenumber above is completed by inserting the first two figures (resistance code) followed by the multiplier.

4 for R = 100K to 910 KΩ
5 for R = 1M to 9.1 MΩ
6 for R = or > 10M

Example's:
The serv.nbr. for a VR25 resistor of 100 KΩ is 4822 053 20104
The serv.nbr. for a VR37 resistor of 33 MΩ is 4822 053 21336

PR01, PR02 and PR03 power metal film resistors

$øD_{max}$	L1	$L2_{max}$	ød
2.5	6.5	8.0	0.6

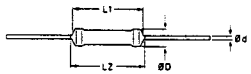

$øD_{max}$	$L1_{max}$	$L2_{max}$	ød
3.9	10	11	0.8

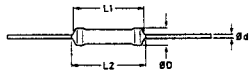

$øD_{max}$	$L1_{max}$	$L2_{max}$	ød
5.2	16.7	17.9	0.8

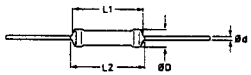

Rated dissipation at T(amb) = 70 degrees :
PR01 = 1 Watt, PR02 = 2 Watt, PR03 = 3Watt

Composition of the service number for the PR01, PR02 and PR03
Main subgroup: 4822 053 10... ; 4822 053 11... and 4822 053 12...

The codenumber above is completed by inserting the first two figures (resistance code)followed by the multiplier.

8 for R= 1 to 9,1 Ω
9 for R= 10 to 91 Ω
1 for R= 100 to 910 Ω
2 for R= 1 to 9,1 KΩ
3 for R= 10 to 91 KΩ
4 for R= 100 to 910 KΩ
5 for R= or > 1 MΩ

Example:
The serv.nbr. of a PR01 resistor of 47 Ω is: 4822 053 10479
The serv.nbr. of a PR03 resistor of 1 MΩ is: 4822 053 12105

NFR25 fusible resistors ⚠

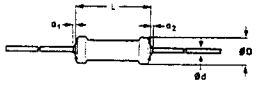

D_{max}	L_{max}	d	$a_1 + a_2$
2.5	6.5	0.6	< 1

Composition of the service number for the NFR25
Main subgroup: 4822 052 10...

The codenumber above is completed by inserting the first two figures (resistance code)followed by the multiplier.

8 for R= 1 to 9,1 Ω
9 for R= 10 to 91 Ω
1 for R= 100 to 910 Ω
2 for R= 1 to 9,1 KΩ
3 for R= 10 to 91 KΩ

Example:
The service number of a resistor of 47 Ω is: 4822 052 10479

NFR25H fusible resistors ⚠

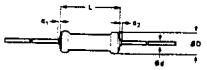

$D_{max.}$	$L_{max.}$	d	$a_1 + a_2$
2,5	6,5	0,6	< 1

Composition of the service number for the NFR25H
Main subgroup: 4822 052 11...

The codenumber above is completed by inserting the first two figures (resistance code)followed by the multiplier.

8 for R= 1 to 9,1 Ω
9 for R= 10 to 91 Ω
1 for R= 100 to 910 Ω
2 for R= 1 to 9,1 KΩ
3 for R= 10 to 91 KΩ

Example:
The service number of a resistor of 47 Ω is: 4822 052 11479

RC-01, RC-11 AND RC-21 chip resistors

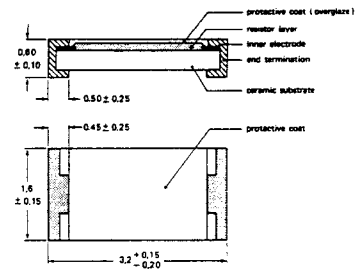

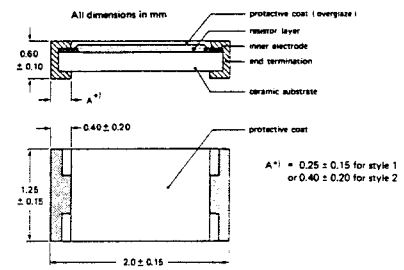

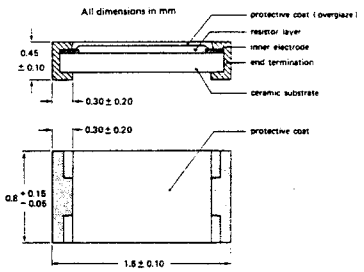

Absolute max. dissipation :
RC-01 : 0,25 W, RC-11 : 0,10 W, RC-21 :0,062 W.

Range: RC-01 0 Ω TO 10 MΩ
RC-11 0 Ω TO 10 MΩ
RC-21 0 Ω TO 6,8 MΩ

Composition of the service number for the RC-01,RC-11 and RC-21
Main subgroup: 4822 051 10... , 4822 051 20... and 4822 051 30...
The codenumber above is completed by inserting the first two figures (resistance code) followed by the multiplier.

8 for R=	0	to 9.1 Ω
9 for R=	10	to 91 Ω
1 for R=	100	to 910 Ω
2 for R=	1	to 9.1 KΩ
3 for R=	10	to 91 KΩ
4 for R=	100	to 910 KΩ
5 for R=	1	to 9.1 MΩ
6 for R= or > 10 MΩ		

Example's:
The serv.nbr. for a RC-01 resistor of

0 Ω is 4822 051 10008
The serv.nbr. for a RC-11 resistor of
0 Ω is 4822 051 20008
The serv.nbr. for a RC-21 resistor of
0 Ω is 4822 051 30008

The serv.nbr. for a RC-01 resistor of
10 Ω is 4822 051 10109
The serv.nbr. for a RC-11 resistor of
10 Ω is 4822 051 20109
The serv.nbr. for a RC-21 resistor of
10 Ω is 4822 051 30109

MRS16T metal film resistors with low-inductance

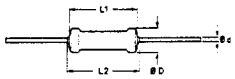

D	L	L2 max.	d
1,7 +0,2 −0,1	3,5 +0,2 −0,15	3.7	0,5 −0,04

Composition of the service number for the MRS16T
Main subgroup: 4822 050 1....
The codenumber above is completed by inserting the first three figures (resistance code)followed by the multiplier.

8 for R=	4,99	to 9,76 Ω
9 for R=	10	to 97,6 Ω
1 for R=	100	to 976 Ω
2 for R=	1	to 9,76 KΩ
3 for R=	10	to 97,6 KΩ
4 for R=	100	to 976 KΩ
5 for R= or > 1 MΩ		

Example:
The service number of a resistor of 487 Ω is:
4822 050 14871

MRS25 metal film resistors (0,5%)

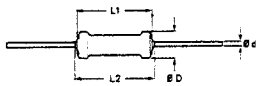

D	L1	L2 max	d
2,5	6,5	7,0	0,6 ± 0,03

Composition of the service number for the MRS25
Main subgroup: 4822 050 2....

The codenumber above is completed by inserting the first three figures (resistance code) followed by the mutiplier.

8 for R=	1 to 9,76 Ω
9 for R=	10 to 97,6 Ω
1 for R=	100 to 976 Ω
2 for R=	1 to 9,76 K Ω
3 for R=	10 to 97,6 K Ω
4 for R=	100 to 976 K Ω
5 for R=	1 to 9,76 M Ω
6 for R= or > 10 M Ω	

3.4 SERVICE TOOLS

Normal tools:

4822 397 30184	Audio signals disc
4822 395 50145	Torx screwdriver set
4822 395 50435	Torx 3 screwdriver
4822 321 61878	Complete set of extension cables
4822	Photo C.D. test disc

Special tools:

4822 397 30096	Audio test disc 5 + 5A
4822 397 30155	Audio test disc 1 KHz
4822 397 60141	Audio disc max. diameter
4822 395 30204	13th order filter

3.5 MEASURING EQUIPMENT

Electronic Digital Multimeter
Digital oscilloscope
Analog oscilloscope

4.1 DEMOUNTING INSTRUCTIONS

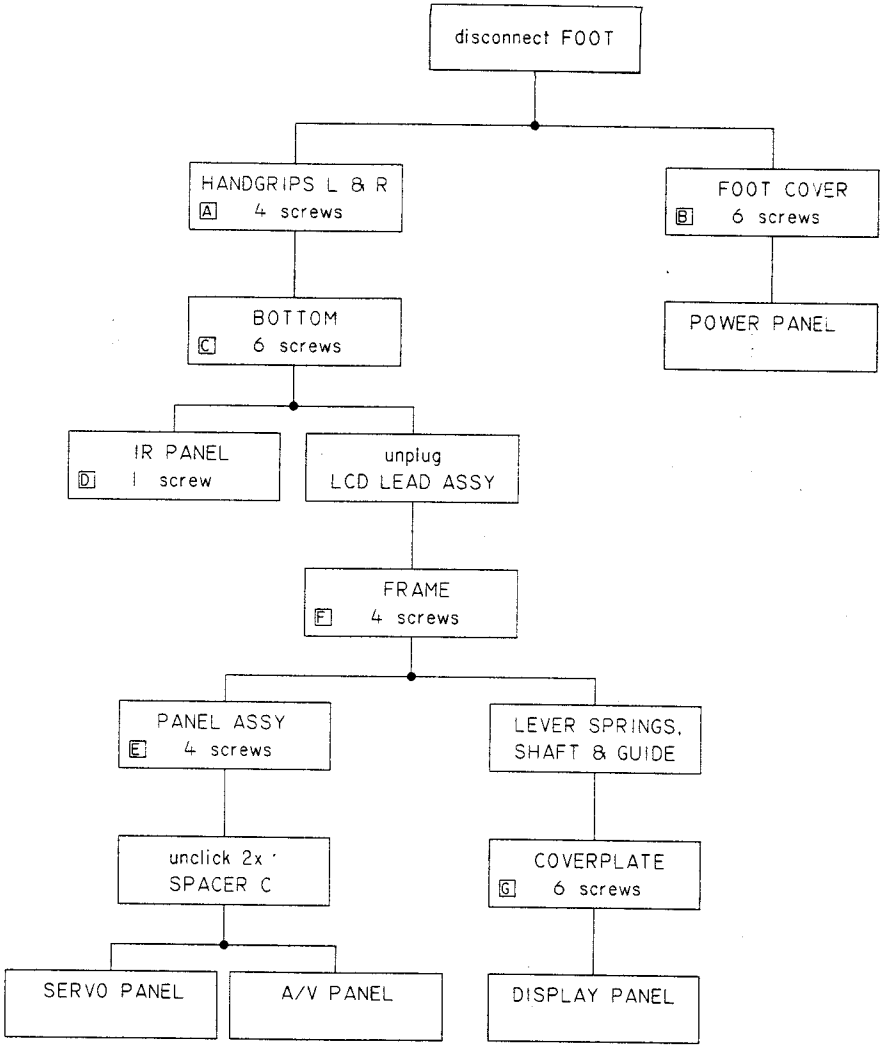

4.2 EXPLODED VIEW

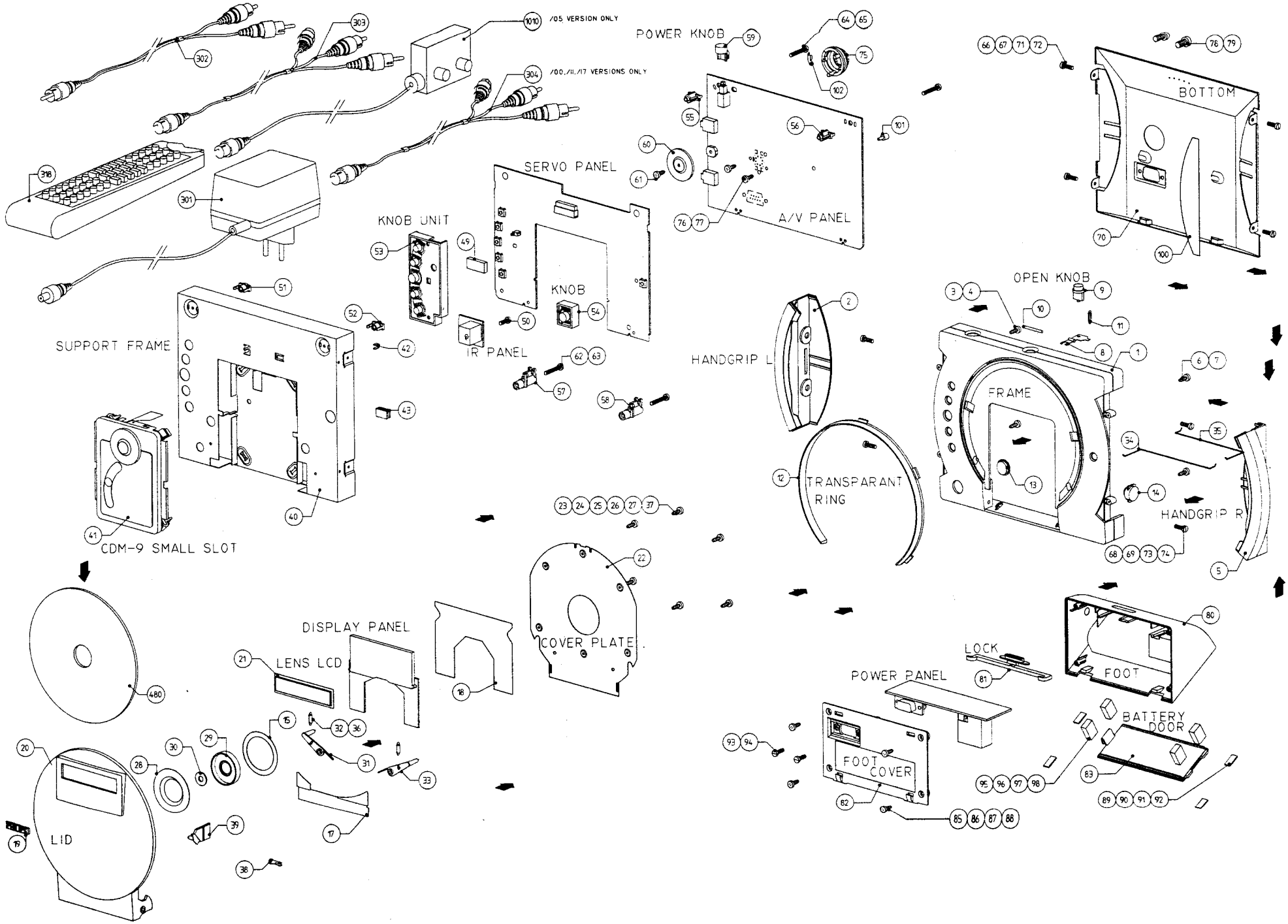

4.3 PACKAGING INSTRUCTIONS

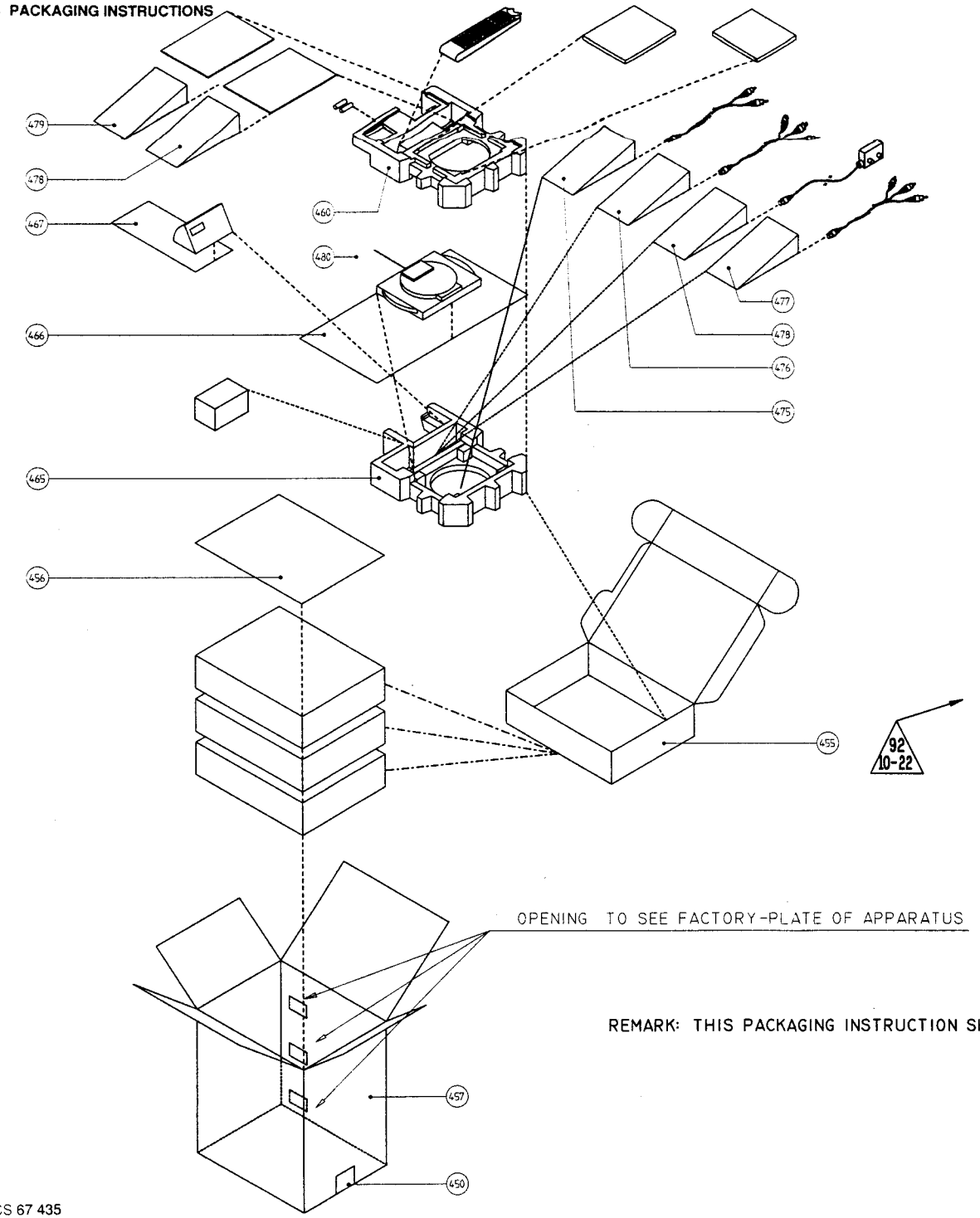

PACKAGING INSRUCTINS

1. FOLD POS. 455
2. PUT POS. 465 IN POS. 455
3. PUT AC/DC ADAPTER IN POS. 455
4. WIND POS. 467 AROUND FOOT AND PUT IT IN POS. 465
   REMARK: ONLY ONE DIRECTION POSSIBLE, GUIDED WINDING
   OPEN APPARATUS AND PUT POS. 480 BETWEEN CDM AND COVER
5. WIND POS. 466 AROUND APPARATUS AND PUT IT IN POS. 465
   REMARK: ONLY ONE DIRECTION POSSIBLE, GUIDED WINDING
6. PUT AUDIO-CORDSETS IN POS. 475,476,477 AND 478

   PUT THOSE IN FORESEEN ROOM IN POS. 465
7. PLACE POS. 460 ON POS. 465
8. PUT BATTERIES IN POS. 460
9. PUT IR.REMOTE CONTROL IN POS. 460
10. PUT DEMO DISC (SMALLER OR WIDTHER BOX) IN NEST

    FORSEEN IN POS. 460
    REMARK: TEXT MUST BE STRAIGHTENED TO YOU
11. PUT DFU'S 1 OR 2 IN BAG (POS. 478-479) AND PUT THEM
    IN NEST FORSEEN IN POS. 460
    REMARK: TEXT MUST BE STRAIGHTENED TO YOU
12. CLOSE POS. 455 (BOX)
13. FOLD POS. 457 AND TAPE BOX WITH POS. 457
14. PUT 3 PACKED APPARATUS IN POS. 457
    REMARK: TEXT MUST BE STRAIGHTENED TO YOU
15. FOLD POS. 456 AND PUT IT ON THE TOP OF THE 3-RD APPARATUS
    REMARK: TEXT MUST BE STRAIGHTENED TO YOU
16. CLOSE POS. 457 AND TAPE IT WITH POS. 450 AND PUT
    ON THE PALLET AS DESCRIBED ON SHEET 560

REMARK: THIS PACKAGING INSTRUCTION SHEET CONTENTS THE PACKAGING OFF ALL VERSIONS (/00, /05, ...)

4.2.1 Demounting of FLEX FOILCDM-9

- Remove the "flex foil" from the connector(s) on the PCB by lifting the upper part of the connector and taking the flex foil out. (see fig. MDA 01408)
- After disconnecting of the "flex foil" short-circuit the by means of a paperclip or constructive clip.
- Note

  Since laser, monitor diode and photodiodes are very sensitive to electrostatic discharges, careless handling during servicing may reduce life expectancy drastically. For this reason care should be taken that during servicing the potentials of the aids and yourself are equal to that of the screening of the set.

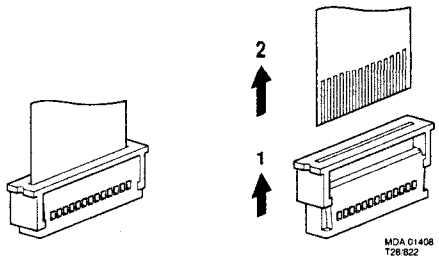

5 DESCRIPTIONS

The system parts of the servo and decoder are:

- **CDM-9 optical pick up**
- **TDA8808 bipolar photodiode signal processor**
- **TDA8809 bipolar radial error processor**
- **SAA7310 NMOS Single Chip decoder**
- **SAA7321 NMOS digital filter with bitstream DAC**

5.1.1 CDM-9 optical pick up

Mechanics

The pick-up is mounted at the end of a low-inertia balanced arm pivoted at its center. A coil housed in the arm and a permanent magnet attached to the chassis form a linear motor used both to track and to fast-feed the pick-up across the disc. When the motor is energized, the pick-up can be directed quickly to any track (<1 sec from inner to outer track), and can follow the center of the track accurately to within 0,1 um. Since there is only one moving part (the arm pivot), the mechanism is extremely reliable and wear is minimal. A feature of the CDM-9 pick-up is its simple diffraction-limited optics.

5.1.2 PHOTO DIODE SIGNAL PROCESSOR TDA8808

The TDA8808 is a bipolar integrated circuit designed for use in compact disc players with a single spot read out system. It amplifies the photo-diodes signals and processes the error signals for the focus- and radial control circuitry.
Also built-in the laser supply, focusnormalizing circuit and focus starting circuit.

ABBREVIATION	PIN NBR	DESCRIPTION
DEC	28	Decoupling input (Internal bypass)
HF IN	26	HF current input to HF amplifier
D1 - D4	22 - 25	Current inputs to DC and LF photo diode amplifier.
RE1	21	Radial Error signal 1 (summation of amplified currents D_3 and D_4.)
RE2	20	Radial Error signal 2 (summation of amplified currents D_1 and D_2.)
GCLF	19	Gain control input for AC and LF amplifiers. Current output from LF amplitude detector.
LM	18	Laser Monitor diode input
LO	17	Laser amplifier current output
FE lag	16	Focus Error signal output for LAG network.
FE	15	Focus Error signal output.
CLPF (LPF)	14	Low Pass filter.
VBB (V_{ext})	13	Neg. Supply for FE and FE lag output stage.
DODS ($\overline{DODS}$)	12	Drop Out Detection Suppression input
TL($\overline{TL}$)	11	Track Lost output
HFD (PLLH)	10	High Frequency Detector output
FS(FOC Start)	9	Focus normalizing circuit starting current.
BGC	8	DC and LF gain control ref.input.
BEQ	7	Equalizer reference current input.
SI/RD(SI/$\overline{RD}$)	6	On/Off control for laser supply and focus circuit. Ready Signal, starting up procedure succesful.
SC	5	Starting up capacitor input.
DET	4	HF detector voltage input.
HFout	3	HF amplifier and equalizer voltage output.
Vp	2	Positive supply voltage
GCHF	1	Gain Control input of HF amplifier. Current output from HF amplitude detector

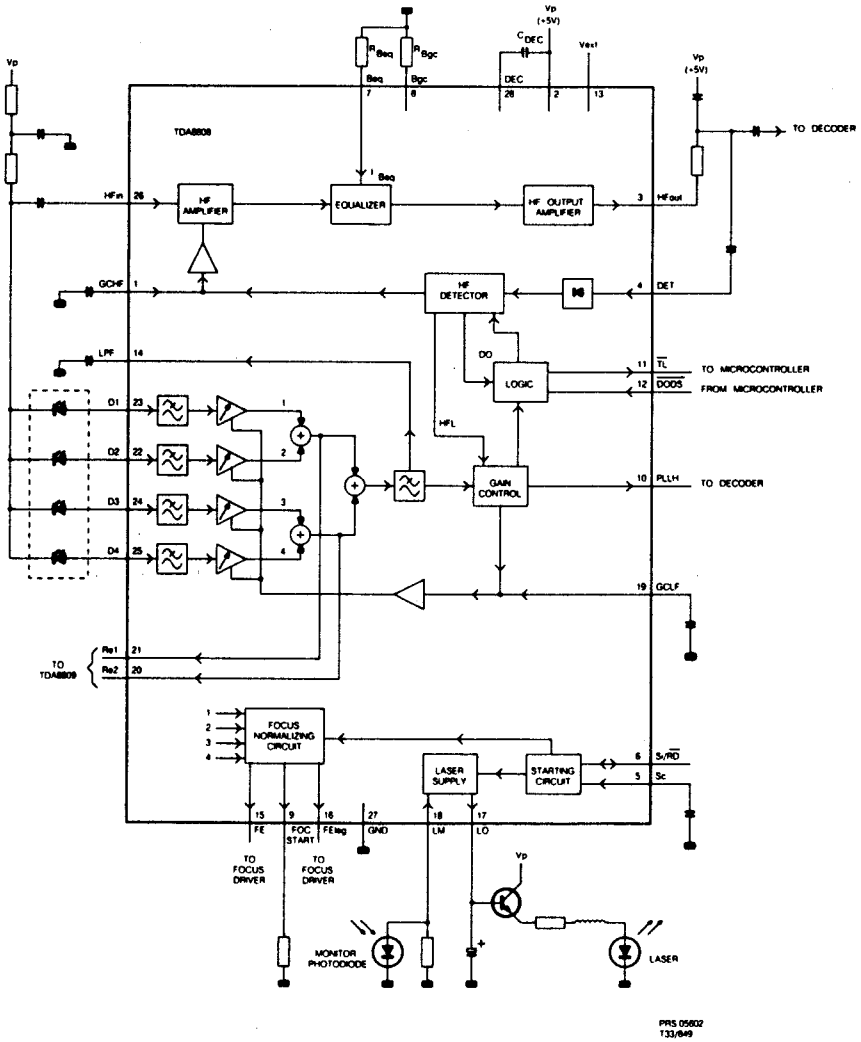

5.1.3 RADIAL ERROR SIGNAL PROCESSOR TDA 8809

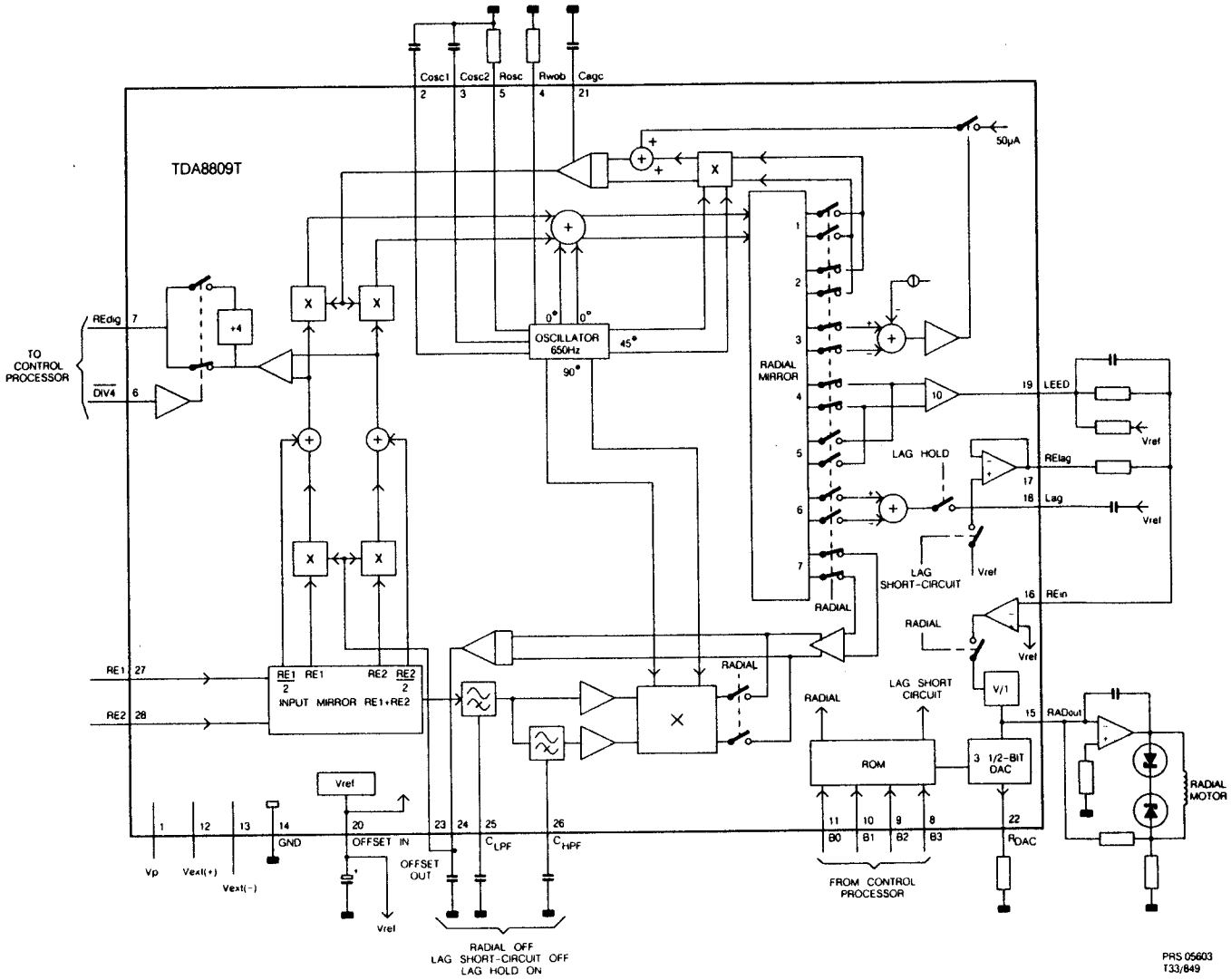

The TDA8809 is a bipolar integrated circuit which provides control signals for the radial swingarm of the CDM. These control signals are received from the TDA8808 and velocity control signals (jump to, pause) from the drive (control)processor.

ABBREVIATION	PIN NBR	DESCRIPTION
RE2	28	Input for amplified currents from photo diodes D_3 and D_4
RE1	27	Input for amplified currents from photo diodes D_1 and D_2
CHPF	26	High Pass Filter for RE1 and RE2
CLPF	25	Low Pass Filter for RE1 and RE2
Offset out	24	Radial offset control output
Offset in	23	Radial offset control input
RDAC	22	Current output for bias resistor
AGC	21	Automatic Gain Control for RE signal
LEAD	19	Lead output
Lag	18	Connection of integrator for (RE1 - RE2) input current
REIag	17	Voltage output of integrated (RE2 - RE1) input currents
REI (RE in)	16	Radial Error Input
RP (REdig)	7	Digital output signal (RE2 - RE1) DIV4 (*DIV4*) 6 Divide by 4 input
Rosc	5	Biassing resistor for oscillator
Rwob	4	Wobble generator input
Cosc2	3	Frequency setting cap.for wobble
Cosc1	2	osc.
Vp	1	Positive supply voltage

5.1.4 DECODER SAA 7310

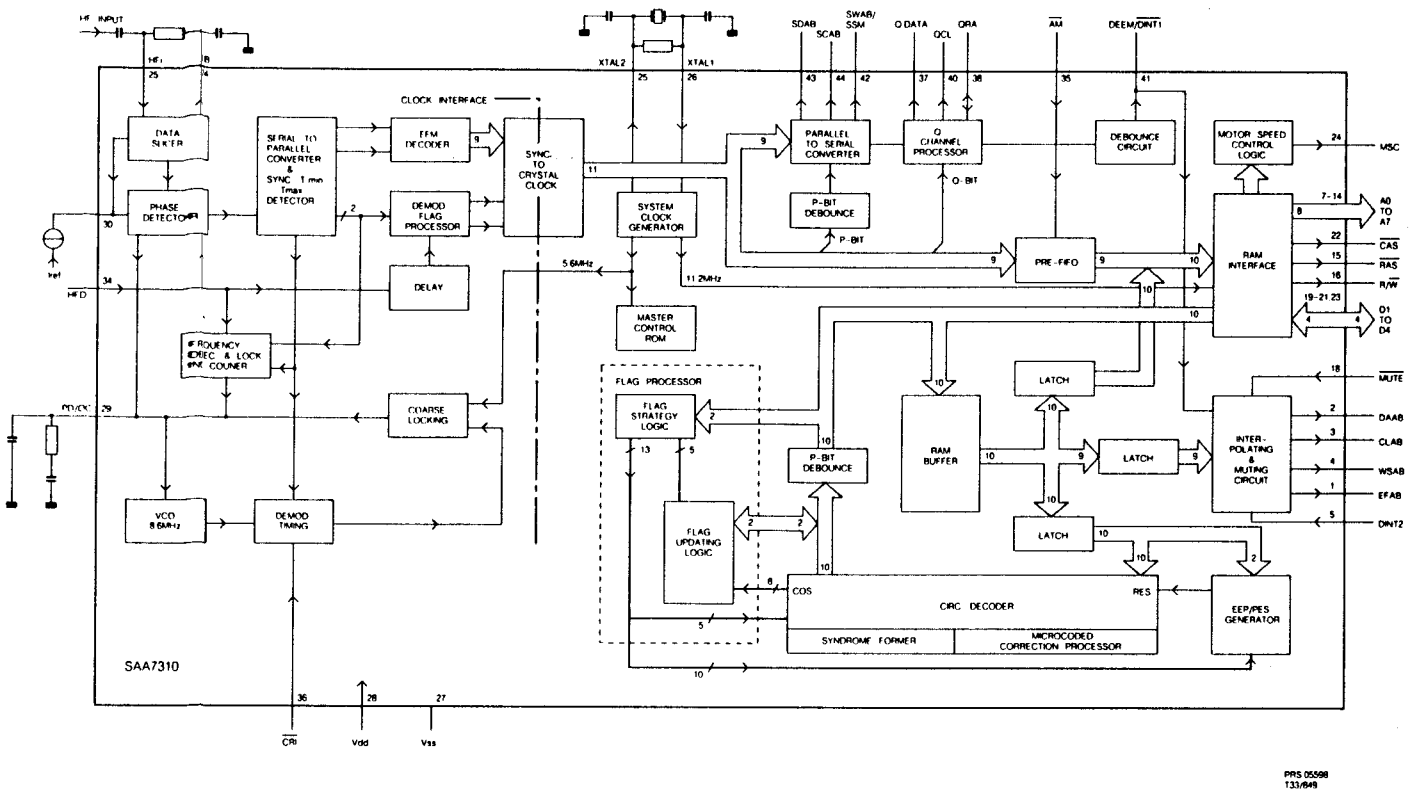

The SAA7310 incorporates the functions of demodulator, subcoding processor, error corrector and concealment in one CMOS chip.
HF signal from the disc (EFM) is decoded and output as serial data to the ADOC IC
Also built-in the turntable motor speed control.

ABBREVIATION	PIN NBR	DESCRIPTION
EFAB	1	Error Flag output indicating data unreliable.
DAAB	2	Data output of I^2S bus
CLAB	3	Clock output of I^2S bus
WSAB	4	Word select output of I^2S bus
DINT2	5	Data Interpolated input
A0 - A_7	7 - 14	Address outputs to Ext. RAM
RAS ($\overline{RAS}$)	15	Row Address Select output to Ext. RAM
R/W ($\overline{R/W}$)	16	Read/Write output signal to Ext. RAM
MUTE ($\overline{MUTE}$)	18	Mute signal input from μP.
D1 - D3	19 - 21	Data inputs / outputs to Ext. RAM
D4	23	Data input/output to Ext.RAM
CAS ($\overline{CAS}$)	22	Colomn Address Select output to Ext. RAM
MC (MSC)	24	Motor Speed Control output.
XTAL2	25	Crystal output
XTAL1	26	Crystal Input
PD/OC	29	Phase Detector Output / Oscillator Control Input
CREF (Iref)	30	Current Reference Input.
FB	31	Feedback output
HFI	32	High Frequeny Input
HFD	34	High Frequency Detector
CRI ($\overline{CRI}$)	36	Counter Reset Inhibit
QDA	37	Q-Channel Data signal output
QRA	38	Q-Channel Request input/Acknowledge output.
QCL	40	Q-Channel Clock input.
SWAB/SSM	42	Subcoding Word Clock output and Start/Stop Motor input
SDAB	43	Subcode Data output.
SCAB	44	Subcode Clock output.

5.1.5 Bitstream DAC

SAA7321 : NMOS digital filter with enhanced concealment of uncorrectable errors
. IIS flexible data input
. Phase linear digital filter with 1st order noise shaper
. 256 times oversampling by linear interpolation and sample hold
. 16 bit super linear resolution
. Switch capacitor 1 bit converter
Low power consumption typ. 300 mW
Temperature range -40 C - + 85 C
Single supply operation + 5 V

PIN NO.	ABBRE-VIATION	DESCRIPTION
1	CDR	Capacitor Damping Right
2	DER	De-Emphasis Right
3	VrefR	Reference voltage Right
4	VSSAR	Ground Analogue Right
5	VSSA	Ground logic Analogue section
6	VSSAL	Ground Analogue Left
7	VrefL	Reference voltage Left
8	DEL	De-Emphasis Left
9	CDL	Capacitor Damping Left
10	INTL	Integrator Left
11	VDDAL	Power Supply +5V Analogue Left
12	OALI-	Operational Amplifier Left Input-
13	OALI+	OpAmp Left Input+
14	OALO	OpAmp Left Output
15	VDDref	Power Supply: +5V
16	VRO	Reference Voltage Output
17	VRC	Reference Voltage Capacitor
18	TEST4	Test output 5 (NC)
19	DAO	I2S Serial Data Output (NC)
20	CLO	I2S Serial bit Clock Output (NC)
21	WSO	I2S Word Select Output (NC)
22	VDD1	Power supply +5V Digital
23	VDD2	Power Supply +5V (OSC)
24	XTAL2	Crystal oscillator output
25	XTAL1	Crystal oscillator input
26	XSYS	System clock output (NC)
27,28	VSS	Ground digital section
29	TEST1	Test input 1
30	WSI	I2S Word Select Input (WSAB)
31	CLI	I2S Serial bit Clock Input (CLAB)
32	DAI	I2S Serial Data Input (DAAB)
33	n.c.	
34	DEC	De-Emphasis Control
35	MUTE	Mute:
36	ATT	Attenuation
37,38	TEST2,3	Test output 2 and 3 (open)
39	VDDA	Power Supply +5V Analogue
40	OARO	OpAmp Right Output
41	OARI+	OpAmp Right Input +
42	OARI-	OpAmp Right Input -
43	VDDAR	Power Supply +5V Analogue right
44	INTR	Integrator Right

"BITSTREAM" DIGITAL-TO-ANALOGUE CONVERSION - SIMPLY EXPLAINED

As a technique, Digital-to-Analogue (D/A) conversion is inevitably partly digital and partly analogue.In view of the extreme precision of digital technology, however, the more digital D/A conversion is, the better the result is likely to be. CD is a 16-bit digital audio system (each 16-bit sample is a 16-bit binary number), and the successive samples are converted into a continuous analogue audio waveform by the Digital-to-Analogue Converter (DAC).

ORTHODOX D/A CONVERSION

The orthodox way to do this is to convert each bit of the 16-bit number individually into an equivalent analogue current or voltage value, add the values together to obtain the total analogue value and then assemble successive total values together into a continuous audio waveform.(Basic 16-bit conversion diagram). After the 16-bit number is decoded, this process is entirely analogue.

THE ULTIMATE SOLUTION:"BITSTREAM" 1-BIT CONVERSION

The (Philips)"Bitstream" system uses a 1-bit converter. That is to say, it produces 1-bit samples from the 16-bit CD samples. Each 1-bit sample consists of the MSB, or "sign bit". It can only indicate + Ve or - Ve. But from this information, a positive or negative pulse is produced. Meanwhile, the remainder of the 16-bit sample is carried over to the next 16-bit sample, where it may influence the value of the next 1-bit sample. By this process, a train of pulses is produced; and it is the variations in density of the pulses that represent the variations in the audio waveform. By averaging the pulses (i.e. by low-pass filtering), the analogue audio waveform is regenerated).

"Bitstream" signal processing
The samples decoded from the Compact Disc are turned into the 256-times oversampled "bitstream" in 3 stages.
- Four-times oversampling with interpolation. This attenuate harmonic images of the audio signal and ensures a flat audio response curve in the same way as the digital filtering of an orthodox Philips 16-bit converter.
- 64-times oversampling with interpolation. This produces 11,289,600 16-bit samples per second, very closely defining the decoded audio signal.
- 16-bit/1-bit code conversion with noise shaping. This produces the single-bit pulse train.

In "Bitstream" D/A conversion, only the final signal averaging is performed with analogue circuitry. No component element matching is required, and linearity is excellent. There is no MSB switch around O V level, and thus no crossover distortion.

5.1.6 Compact disc blockdecoder.

The CDBD (CD - BLOCK DECODER) is an integrated circuit which is intended to perform the basic functions on EFM decoder data (CD-ROM /XA /CD-I) to get block structured descrambled data. Three input formats (I2S, SONY and MEC) are hardware selectable by means of two selection lines. The output is an parallel output (8 bit plus errorflag) with "output enable" for the possibility of bus structured architecture. The CDBD is programmable via the µC INTERFACE , Chip Select, two address lines a read/write line and an 8 bits bus. In order to find the beginning of a sector in the data stream the sync detector continuously searches for the 12 bytes sync pattern.
The CRC circuit checks the EDC in the data and put its result into the status register (bit 3).
Both HEADER and SUBHEADER can be read out via the µC INTERFACE.

PINNING OUTLINE

INPUT INTERFACE;

02	WSIN	: (Input). Word Select from EFM decoder.
04	DAIN	: (Input). Data Input from EFM decoder.
03	CLIN	: (Input). Data Clock from EFM decoder.
05	EFIN	: (Input). Error Flag from EFM decoder.
23	S1	: (Input). Input format selection.
24	S0	: (Input). Input format selection.

OUTPUT INTERFACE;

22	DEC	: (Input). Output format selection.(DEC=serial)
40	NIRQ	: (Active low output). Indicating new sector
18	NREQ	: (Active low output). Request to buffermanager
19	NACK	: (Active low input). Acknowledge from request.
20	XFER	: (Output). Indicating actual data transferring.
7..14	DD0..DD7	: (Eight bit output). Data bus (processed data)
16	DDE	: (Ninth bit output). Error flag Active High
17	NOE	: (Active low input). Enable output bus.

µC INTERFACE;

28	NWR	: (Input). When low write, when high read.
31..38	MC0..MC7	: (Eight bit bidirectional bus). For C.
26..25	A0..A1	: (Input). Address lines for (sub)header status and command register.
29	NCS	: (Active low input). Chip Select.

MISCELLANEOUS;

27	CLK	: (Input). System clock.
6,21,39	VDD	: (Power supply input). Three times +5V 10%.
1,15,30	GND	: (Power ground input). Three times.

** Scan path enabled if S0 = S1 = "1"

5.1.7 Eve video controller

The EVC takes care of a number of functions and features in consumer PHOTO CD players. It accepts data in the PHOTO CD format, stores it into a 256Kx16 DRAM using 1 of 7 selectable modes. It supports both M-NTSC and B-PAL video timings when reading out the DRAM for a soft display . The display resolution is 512 x 732 for a PAL system and 431 x 485 for an NTSC system. An interface is included for receive control and pass status information to an 8 bit microcontroller. The EVC-1 supports following functions and features :

- rotating a picture in 90 degrees increments.
- displaying a picture in normal mode
- displaying a part of a picture in 2 x tele mode
- displaying a picture in underscan mode
- anti interlace flicker filtering (with selectable coefficients)
- displaying a recticle (256x256 size)
- panning the recticle on the screen
- panning a picture on the screen
- color and monochrome output
- Y, U and V parallel digital output
- automatic screen and DRAM clearing at power-up
- direct interface to DAC and DRAM
- build-in DRAM refresh
- build-in crystal oscillators for PAL and NTSC main and subcarrier clock
- subcarrier lock possibility for NTSC systems
- genlock possibility
- microcontroller interface
- sample rate convertor build-in to enable smaller DRAM size combined with full high quality images and to have a good screen area filling for portrait pictures

The EVC has 4 crystal oscillator invertor cells built-in. They are used for generating the PAL system clock, the NTSC system clock, the double PAL subcarrier clock and the double NTSC subcarrier clock. In PAL mode, only the PAL system clock and subcarrier oscillator are enabled. In NTSC mode, only the NTSC system clock an subcarrier oscillator are enabled.

40 PINS DIL PACKAGE;

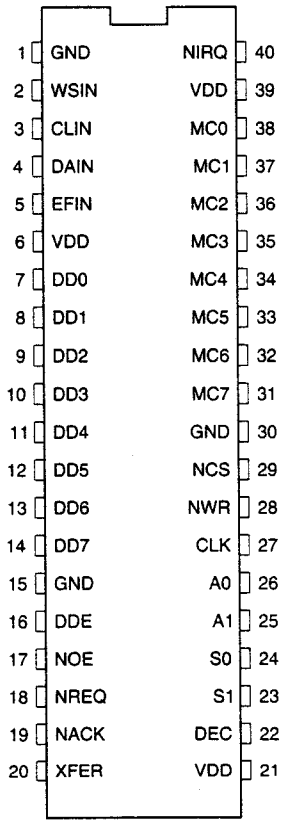

PINNING

pin	name	type	description
77	XFER	INPUT	transfer line, high during read in of a block of data
75	NREQ	INPUT	request handshake; NREQ going low indicates data present on inputs
76	NACK	OUTPUT	acknowledge, handshake line to the NREQ, active low when receiver, else tri-state
66	ID0	INPUT	input data; bit 0
67	ID1		" bit 1
68	ID2		" bit 2
69	ID3		" bit 3
70	ID4		" bit 4
71	ID5		" bit 5
72	ID6		" bit 6
73	ID7		" bit 7
54	RA0	OUTPUT	DRAM address; multiplexed; A0
55	RA1		" A1
56	RA2		" A2
57	RA3		" A3
58	RA4		" A4
59	RA5		" A5
60	RA6		" A6
61	RA7		" A7
62	RA8		" A8
41	RD0	I/O	DRAM data ; DQ0
42	RD1		" DQ1
43	RD2		" DQ2
44	RD3		" DQ3
45	RD4		" DQ4
46	RD5		" DQ5
47	RD6		" DQ6
50	RD7		" DQ7
33	RD8		" DQ8
34	RD9		" DQ9
35	RD10		" DQ10
36	RD11		" DQ11
37	RD12		" DQ12
38	RD13		" DQ13
39	RD14		" DQ14
40	RD15		" DQ15
53	NRAS	OUTPUT	RAS signal for the DRAM, act. low
64	NCASL	OUTPUT	CAS signal for selecting the lower byte of the DRAM (U&V data) active low
63	NCASH	OUTPUT	CAS signal for selecting the higher byte of the DRAM (Y data) active low
51	NWEL	OUTPUT	WE signal for writing to the lower byte of the DRAM (U&V data) active low
52	NWEH	OUTPUT	WE signal for writing to the higher byte of the DRAM (Y data) active low
65	C/NW	INPUT	selects between 2 CAS and 1 WE signals or 2 WE and 1 CAS signals (internal pull-up), if this pin is low WEL and WEH are selected
92	UA0	INPUT	microcontroller address ; bit 0
91	UA1		" bit 1
90	UA2		" bit 2
89	UA3		" bit 3
88	REGSTR	INPUT	microcontroller register strobe (internal pull-up)

pin	name	type	description
79	UD0	I/O	microcontroller data ; bit 0
80	UD1		" bit 1
81	UD2		" bit 2
82	UD3		" bit 3
83	UD4		" bit 4
84	UD5		" bit 5
85	UD6		" bit 6
86	UD7		" bit 7
87	NNED	OUTPUT	strobe signal to the microcontroller, to read in a MRS
117	DY0	OUTPUT	luminance output to DAC ; bit 0
118	DY1		" bit 1
119	DY2		" bit 2
2	DY3		" bit 3
3	DY4		" bit 4
4	DY5		" bit 5
5	DY6		" bit 6
6	DY7		" bit 7
109	DU0	OUTPUT	U chroma output to DAC ; bit 0
110	DU1		" bit 1
111	DU2		" bit 2
112	DU3		" bit 3
113	DU4		" bit 4
114	DU5		" bit 5
115	DU6		" bit 6
116	DU7		" bit 7
7	DV0	OUTPUT	V chroma output to DAC ; bit 0
8	DV1		" bit 1
9	DV2		" bit 2
10	DV3		" bit 3
11	DV4		" bit 4
12	DV5		" bit 5
13	DV6		" bit 6
14	DV7		" bit 7
108	DACCLK	OUTPUT	clock to the DAC ; data is valid on leading edge
95	NCSYNC	OUTPUT	video composite sync, active low
93	NHSYNC	OUTPUT	video horizontal sync, active low
94	NVSYNC	OUTPUT	video vertical sync, active low
98	BKEY	OUTPUT	video burst key, active high
99	NCBLANK	OUTPUT	video composite blank, active low
22	XTIP	INPUT	PAL system clock crystal oscillator
21	XTOP	OUTPUT	
20	XTIN	INPUT	NTSC system clock crystal oscillator
19	XTON	OUTPUT	
28	XTISN	INPUT	NTSC subcarrier crystal oscillator
27	XTOSN	OUTPUT	
26	XTISP	INPUT	PAL subcarrier crystal oscillator
25	XTOSP	OUTPUT	
32	PORIN	INPUT	power-on/off reset input, active low, Schmitt trigger input
31	POROUT	OUTPUT	power-on/off reset output, tristate during power-on/off,low during normal operation
106	N/NPSU	INPUT	PAL/NTSC input select at start up (pull-up resistor)'0'=PAL,'1'=NTSC
105	N/NPO	OUTPUT	video mode output,'0'=PAL,'1'=NTSC
15	SUBCAR	OUTPUT	subcarrier output ;half of the subcarrier oscillator frequency

pin	name	type	description
16	PDOS	OUTPUT	phase detector output of the subcarrier lock (NTSC only)
96	GENLOH	INPUT	horizontal synchronization input for genlocking (internal pull-up), active low
97	GENLOV	INPUT	vertical synchronization input for genlocking (internal pull-up), active low
103	PALALT	OUTPUT	subcarrier phase in PAL mode
102	FIELD	OUTPUT	field output, high for first field low for second field
104	NTEST	INPUT	pin to select testmode, '0' = TEST '1' = normal operation (pull-up)
107	NHIZ	INPUT	testpin to put all outputs in tristate, '0' = outputs tri-state, '1' = normal operation (pull-up)
120	VDD1	POWER	5V power supply
1	GND1	GROUND	ground
17	VDD2	POWER	5V power supply
18	GND2	GROUND	ground
23	VDD3	POWER	5V power supply, for oscillators
24	GND3	GROUND	ground
30	VDD4	POWER	5V power supply
29	GND4	GROUND	ground
48	VDD5	POWER	5V power supply
49	GND5	GROUND	ground
78	VDD6	POWER	5V power supply
74	GND6	GROUND	ground
101	VDD7	POWER	5V power supply
100	GND7	GROUND	ground

* Bit 0 is always the LSB.

5.1.8 Analog video part

Digital to analog conversion
The retrieved digital video signal from the E.V.C. IC 7530 leaves as an eight-bit signal for luminance (Y) and eight-bit for both the color difference signals U (=B-Y) and V (=R-Y). These 3 x 8 bit signals are sent together with a clock signal (= half E.V.C. system clock) to the input of the video D.A.C. (Digital to Analog converter MC44200=IC 7540).The analog luminance and color difference signals are available at the output of the DAC.

Encoding
The encoder IC used is a multi-standard type CXA1229p position 7640.

Inputs
The color difference and luminance signals at pin 2,3 and 4, the switchable subcarriers at pin 6 ,the switchable subcarriers at pin 6 and the also switchable composite sync at pin 10.

Outputs
By means of an internal matrix and buffer the color signals Red, Green and Blue on pin 23, 22 and 21 are directly derived from the color difference and luminance signals. The red green and blue signal is now available on the scart connector pin 15, 11 and 7 modulation.The color difference signals U and V are being quadrature modulated with the subcarrier (3,58 MHz for NTSC and 4,43 MHz for Pal) resulting in a chrominance signal CHR-OUT at pin 15.
The chrominance signal is sent through a band-pass filter 5649 which can be switched over for PAL and NTSC. This band filter eliminates harmonic distortion caused by modulation effects. The chrominance signal is then amplified and sent two ways, one way back to the encoder at pin 17; and second to the Y/C connector. The luminance (Y) output at pin 16 is for chrominance loop through compensation delayed in 5643 and then available ... amplification at the Y/C connector and also at the Y/C mixer in the encoder IC pin 18. In the encoder takes mixing place between chrominance luminance and sync. signals. This results in a CVBS signal at pin 20 available for the scart output as well for the RF-modulator input.

6 THE SERVICE DIAGNOSTIC SOFTWARE

Target
With built-in service diagnostic software it is possible to decrease the repair time of a photo CD player. The principle is to divide the normal functioning procedure into separate steps and every step can give error messages. Due to that fact it is known in what area the error occurs; then the real cause of the error has to be examined.
The service diagnostic software consists of two parts:
- testing of the audio path with servo processor compact disc mechanism, servo i.c.'s, decoder part, digital to analog converters and op-amp's. This part of the service software is almost identical to the service program in normal compact disc players and compact disk interactive players; an audio (test) disc is required.
- testing of the data path like compact disc block decoder (CDBD), Eve Video Controller (EVC) and video digital to analog converters. For this purpose a specific photo CD (test) disc is necessary.

To activate the diagnostic software push buttons PLAY and PAUSE together with power on. On the display S 0 (=zero) appears.

Step 0: testing of communication between servo processor and user processor.

In step 0 communication between the servo processor and user processor are checked; if this is O.K. then the software version number of the servo processor will be displayed. On the position of the tracks on the display the service step is displayed (S0.); the software version number is on the position of the minutes and seconds i.e. S0 12:21, this means service position 0; 12 is the software version number of the user processor (1.2) and 21 is the software version number of the servo processor (2.1).
If a communication error occurs an error message is displayed also on the position of minutes and seconds: S0 Er:00.

Push "next" button to go to step 1.

Step 1: visual check of radial arm.

With the buttons search > and search < the arm can be moved to the inside or to the outside; a visual check is necessary the display now shows S1 0:00.

Push "next" button to go to step 2.

Step 2: testing of focus circuit and laser.

In step 2 the focus circuit and the laser are activated.If focus is found, the message on the display is S2 FOC if not, 16 times the circuit is activated. On display i.e. S2 0:07 (= after 7 times focus is found) you can see how many times are necessary to find focus. After 16 times focus finding will stop and the message S2 0:16 appears.

Push "next" button to go to step 3.

Step 3: visual check of motor and motor control circuit.

In step 3 the motor will start-up without the radial loop closed. The disc will rotate with nominal speed. By moving the arm the motor speed must match to the position of the arm.

Push "next" to go to step 4.

Step 4: testing of the radial loop.

In this step the loop is closed. If the arm does not follows track an error message will appear: S4 Er:XX. If the arm follows track then 00 will be displayed: S4 0:00; also subcode is read.
If a subcode error occurs an error message appears: S4 Er:XX.
During trackfollowing and no subcode error, subcode time is displayed: track, minutes, seconds.
No service indication S is displayed.

Push "next" to go to step 5.

Step 5: testing op player in normal audio mode.

After "play" the player will start in the normal audio mode; in this situation the TOC is read in. All function buttons of the player can be used.

With open/close a photo CD can be inserted.

Push "next" to go to step 6.

Step 6: testing of registers of video controller (EVC).

In this step a number of internal registers of the video-controller (EVC) are checked.
If an error occurs the message S6 Er:00 will appear.
If no error occurs 0:00 will be send to the display so S6 0:00 is displayed.

Push "next" to go to step 7.

Step 7: testing of compact disc block decoder (CDBD).

In step 7 the Photo CD is started-up and there is a jump to address 00:02:00.
Two tests are carried out:
- searching for sync patterns: if no sync patterns are found an error message will appear S7 Er:00 and if sync patterns are found the following message appears: S7 0:01
- reading of headers: if not possible then an error message will appear: S7 Er:01; if yes then S7 0:02 is displayed.

Push "next" to go to step 8.

Step 8: testing of block decoder (CDBD) and video controller (EVC).

Now data is read in from a(n) (ordinary) Photo CD; data from address 00:02:00 is read. These data goes via CDBD and EVC to the microprocessor.
If this functions then S8 0:01 appears; if not then message S8 Er:00 is displayed.

Push "next" for go to step 9.

Step 9: measuring the datapath from CDBD (block decoder) to EVC (video controller).

Now the specific Photo CD testdisc is required.
In step 9 a specific data pattern of the disc is read from CDBD to EVC during 30 seconds. At the CDBD output from MSB to LSB a divided by 2 square wave pattern must be present.
Push "autoplay" if you want to repeat this data pattern; on the display S9 0:00 appears.

Push "next" to go to step 10.

Step 10: loading of an image.

In step 10 an image on the disc will be loaded; the player is now in the normal Photo CD mode and all functions can be checked.

Push "power off" to leave the service mode !

Note: Only in step 5 you can load a photo disc; so in step 5 you have to decide to use or not to use the Photo C.D. test disc.
To check the CDBD(step 9) you need this test disc!!

Error messages ONLY for step 4.

XX		
2	focerr	: focus error
3	exenerr	: exentricity error
4	discerr	: disc error
5	offerr	: TI is low during 50 uS
6	jmperr	: error during jump
7	suberr	: subcode error
8	tocerr	: error during read-in of TOC
20	overrun	: overrun error: serial comm.error
21	framing	: framing error: serial comm.error
22	noise	: noise flag err.: serial comm. error
23	sererr	: common serial comm. error
30	grverr	: number of tracks to jump to is too great
31	stimerr	: time-out for subcode address
32	binerr	: error during binairy search

Error message ONLY for step 5 and 10

XX		
7	suberr	: subcode error

Overview of service diagnostics.

Start with test disc 5 or audio signals disc loaded.

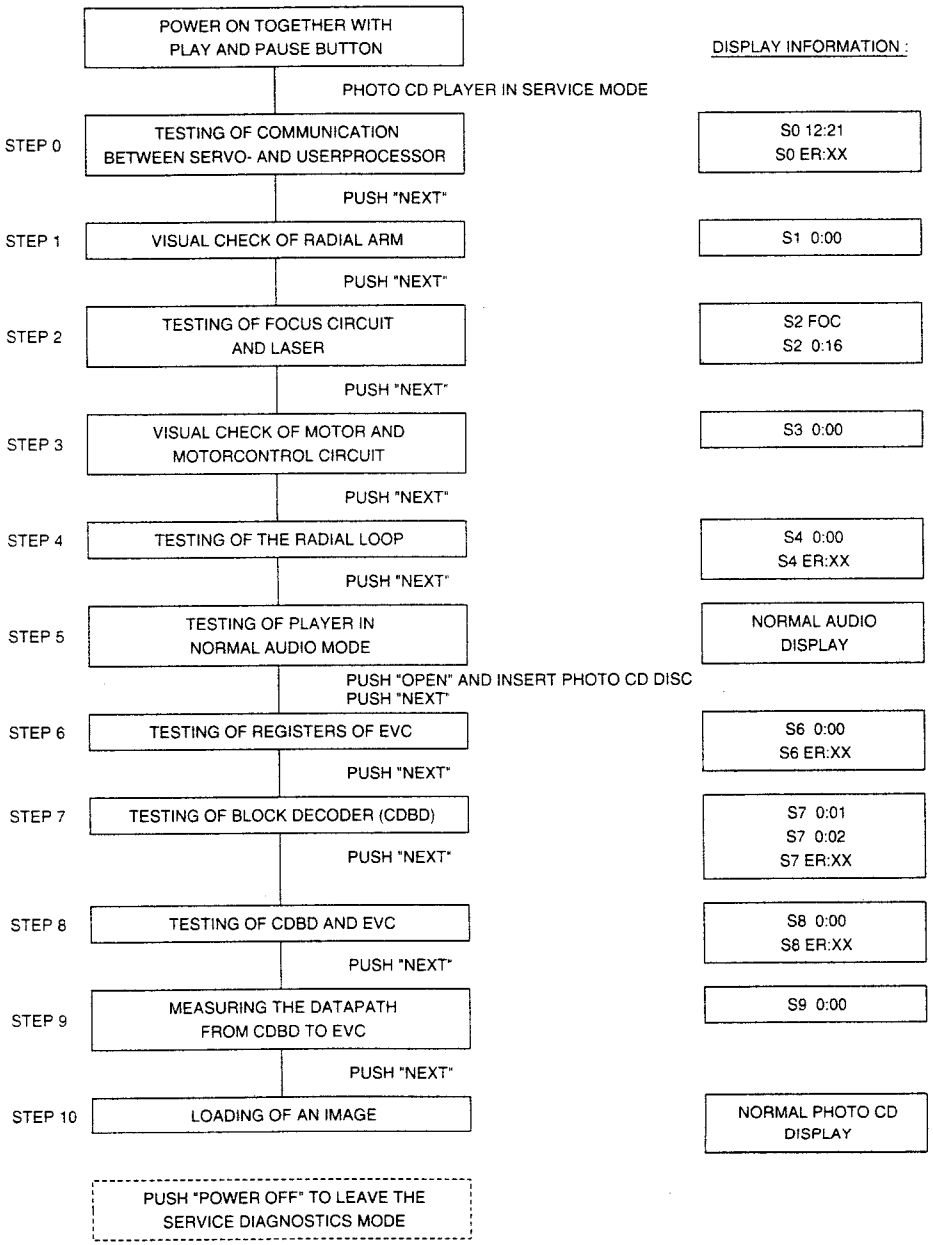

WIRING DIAGRAM

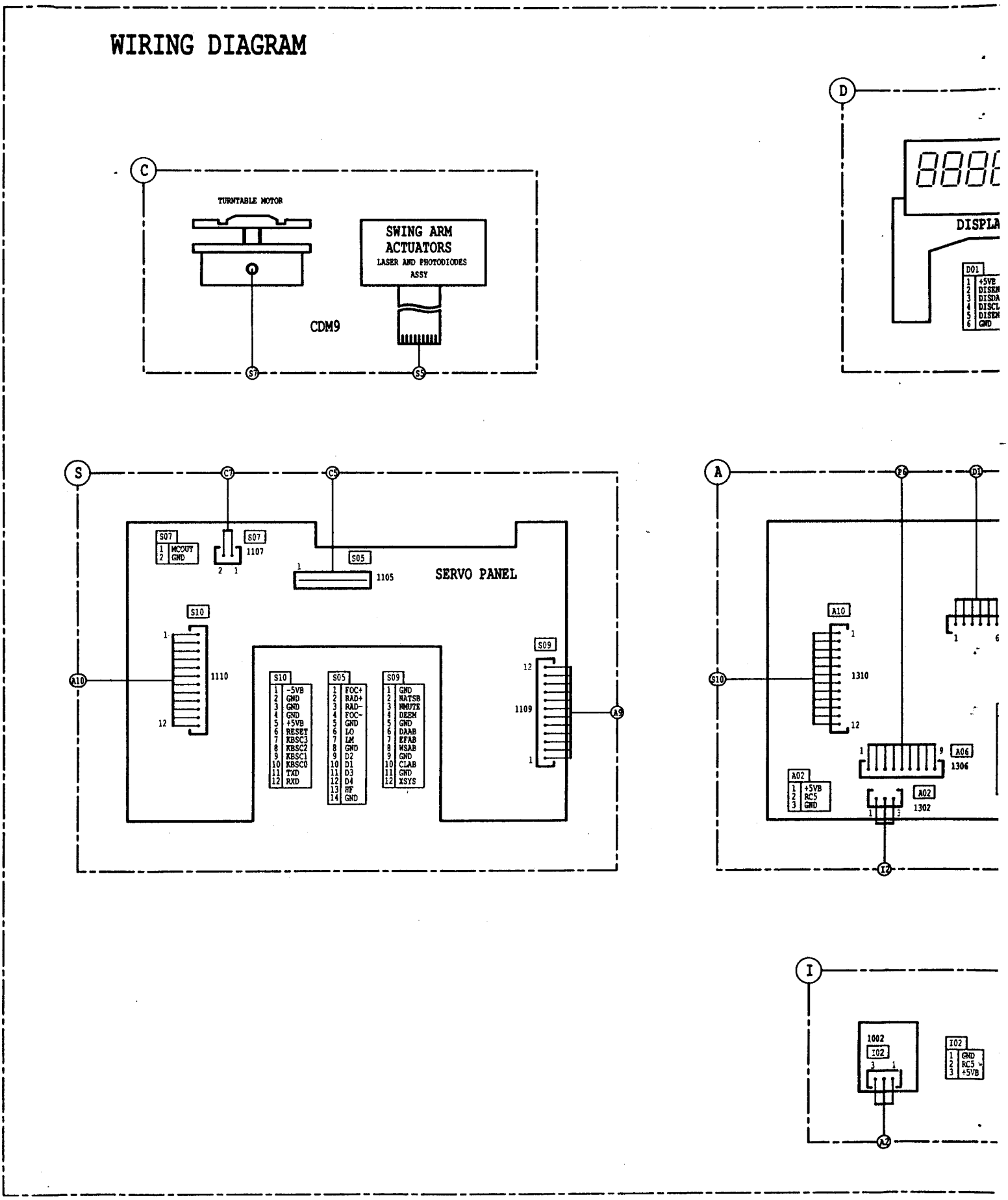

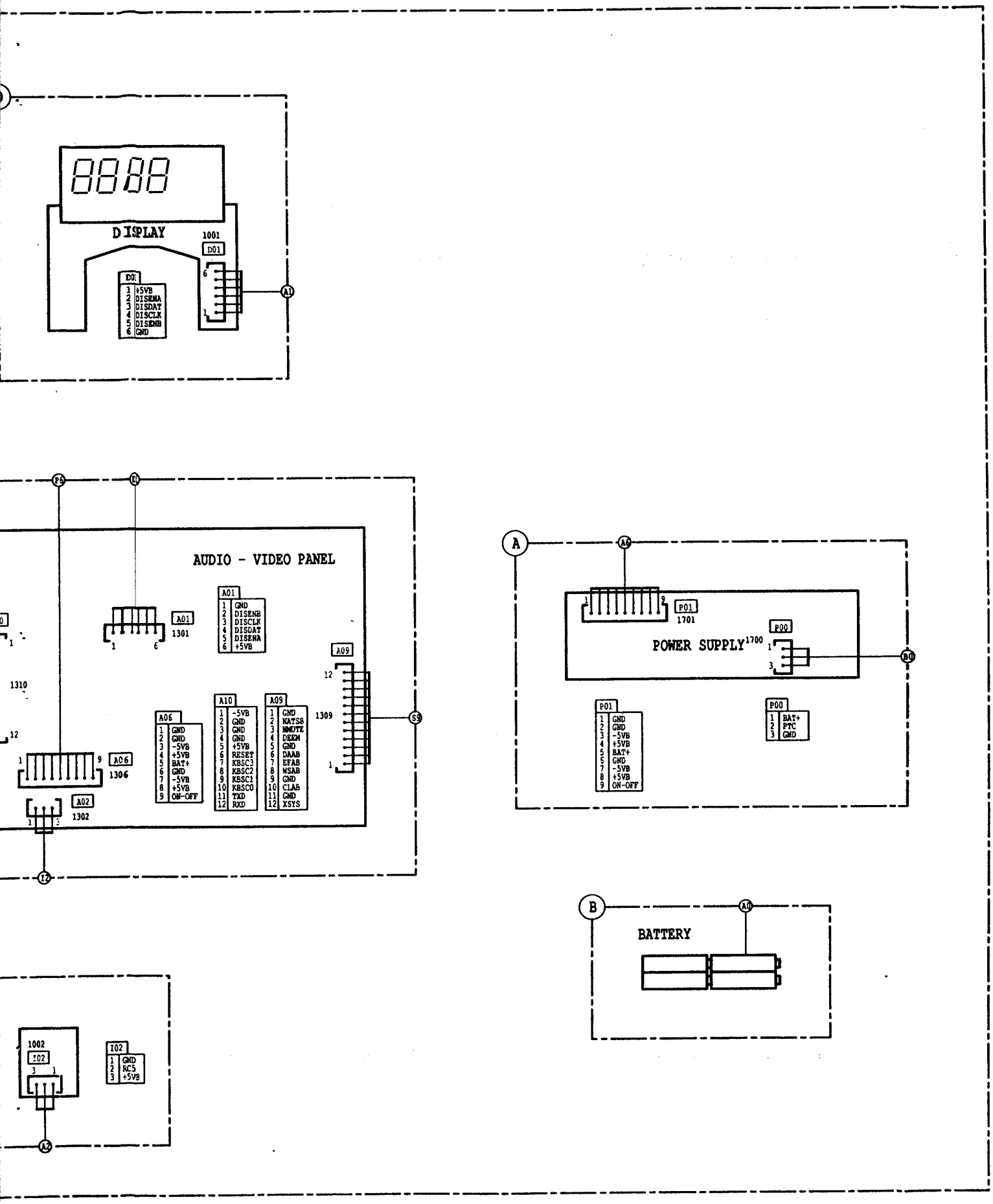

DISPLAY
1001
D01
D01
1 +5VB
2 DISENA
3 DISDAT
4 DISCLK
5 DISENB
6 GND
A1
AUDIO - VIDEO PANEL
A01
1 GND
2 DISENB
3 DISCLK
4 DISDAT
5 DISENA
6 +5VB
A01
1301
A09
1309
1310
A06
1 GND
2 GND
3 -5VB
4 +5VB
5 BAT+
6 GND
7 -5VB
8 +5VB
9 ON-OFF
A10
1 -5VB
2 GND
3 GND
4 GND
5 +5VB
6 RESET
7 KBSC3
8 KBSC2
9 KBSC1
10 KBSC0
11 TXD
12 RXD
A09
1 GND
2 NATSB
3 NMUTE
4 DEEM
5 GND
6 DAAB
7 EFAB
8 WSAB
9 GND
10 CLAB
11 GND
12 XSYS
A06
1306
A02
1302
S9
I2
A
A6
P01
1701
POWER SUPPLY 1700
P00
B0
P01
1 GND
2 GND
3 -5VB
4 +5VB
5 BAT+
6 GND
7 -5VB
8 +5VB
9 ON-OFF
P00
1 BAT+
2 PTC
3 GND
B
A0
BATTERY
1002
I02
I02
1 GND
2 RC5
3 +5VB
A2

7.2 BLOCK DIAGRAM

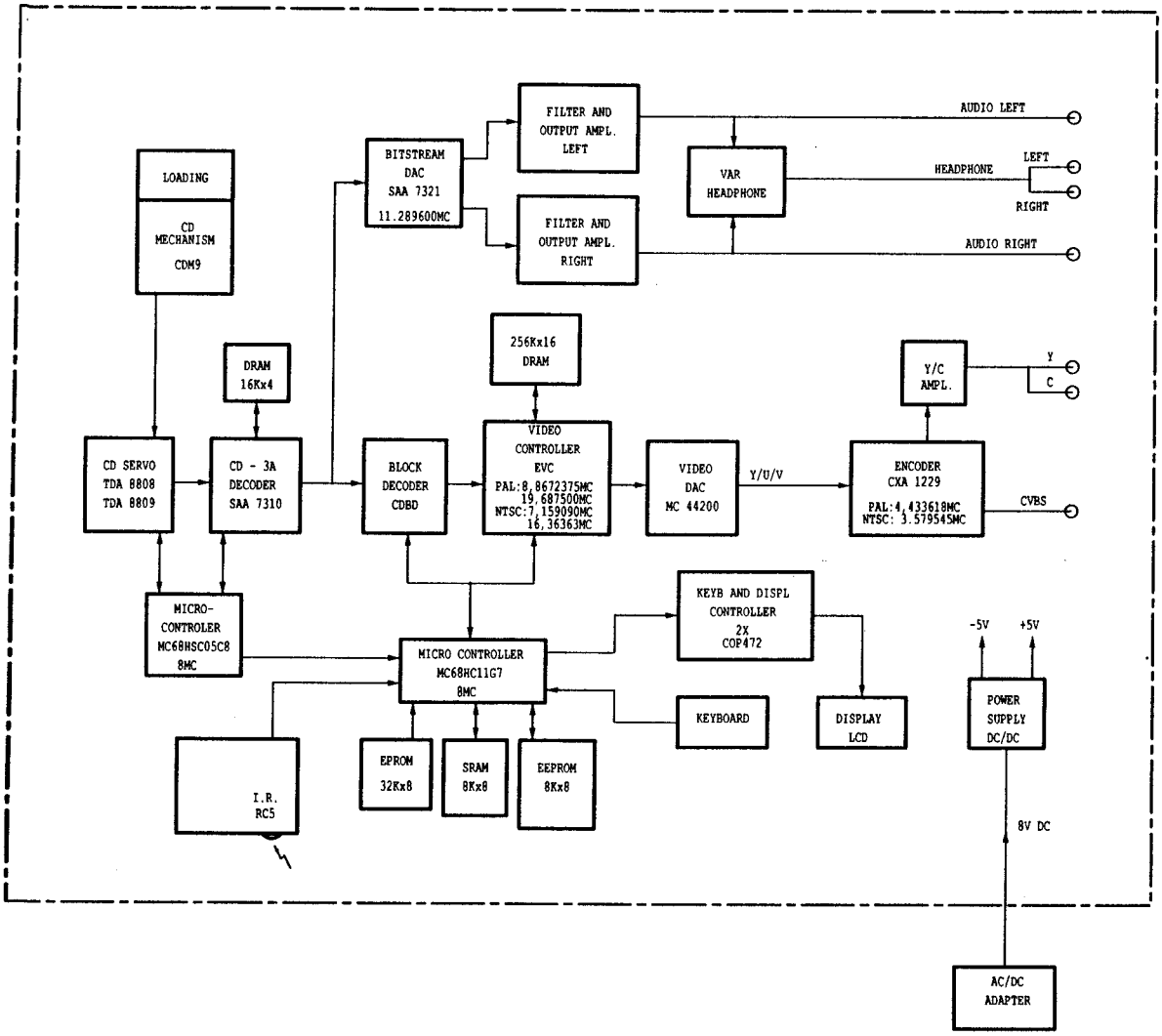

7.3 PCB LAYOUT OF POWER SUPPLY

1700 A 3	2720 A 1	2754 A 2	3706 A 2	3718 A 1	3741 A 3	3763 A 3	6700 A 2	6764 A 3	7726 A 3
1701 A 1	2728 A 3	2755 A 1	3707 A 3	3720 A 3	3742 A 3	3764 A 2	6701 A 2	6765 A 3	7728 A 3
1702 A 1	2730 A 3	2756 A 2	3708 A 3	3721 A 3	3743 A 3	3765 A 2	6702 A 1	7700 A 1	7741 A 3
1720 A 1	2731 A 3	2763 A 2	3709 A 2	3722 A 3	3744 A 3	3766 A 3	6708 A 2	7703 A 1	7742 A 3
2708 A 3	2732 A 3	2764 A 3	3710 A 2	3723 A 3	3746 A 3	3767 A 3	6716 A 2	7704 A 1	7743 A 3
2710 A 2	2742 A 3	2765 A 3	3711 A 2	3724 A 3	3751 A 2	3768 A 3	6741 A 3	7706 A 2	7744 A 3
2711 A 2	2744 A 3	3700 A 1	3712 A 2	3725 A 3	3752 A 2	3769 A 3	6745 A 3	7710 A 2	7755 A 1
2712 A 3	2746 A 3	3701 A 1	3713 A 2	3726 A 3	3753 A 2	3780 A 3	6746 A 3	7711 A 2	7760 A 2
2713 A 2	2750 A 2	3702 A 1	3714 A 2	3730 A 2	3754 A 2	3781 A 3	6750 A 2	7714 A 2	7761 A 3
2714 A 2	2751 A 2	3703 A 2	3715 A 2	3731 A 3	3760 A 2	3782 A 2	6751 A 2	7716 A 2	7762 A 3
2715 A 2	2752 A 2	3704 A 1	3716 A 2	3732 A 1	3761 A 2	5750 A 3	6761 A 2	7724 A 3	7763 A 2
2716 A 2	2753 A 2	3705 A 2	3717 A 2	3740 A 3	3762 A 3	5751 A 2	6762 A 2	7725 A 3	7780 A 2

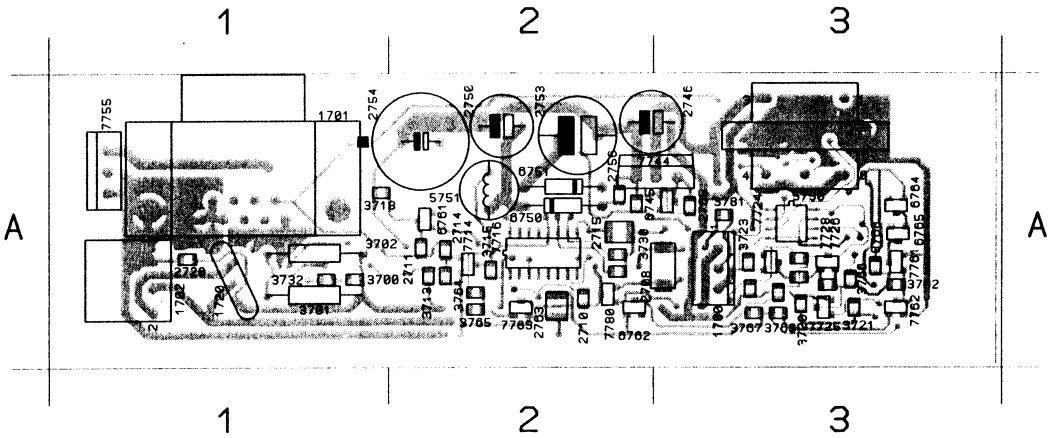

7726 A 3	6764 A 3	6700 A 2	3763 A 3	3741 A 3	3718 A 1	3706 A 2	2754 A 2	2720 A 1	1700 A 3
7728 A 3	6765 A 3	6701 A 2	3764 A 2	3742 A 3	3720 A 3	3707 A 3	2755 A 1	2728 A 3	1701 A 1
7741 A 3	7700 A 1	6702 A 1	3765 A 2	3743 A 3	3721 A 3	3708 A 3	2756 A 2	2730 A 3	1702 A 1
7742 A 3	7703 A 1	6708 A 2	3766 A 3	3744 A 3	3722 A 3	3709 A 2	2763 A 2	2731 A 3	1720 A 1
7743 A 3	7704 A 1	6716 A 2	3767 A 3	3746 A 3	3723 A 3	3710 A 2	2764 A 3	2732 A 3	2708 A 3
7744 A 3	7706 A 2	6741 A 3	3768 A 3	3751 A 2	3724 A 3	3711 A 2	2765 A 3	2742 A 3	2710 A 2
7755 A 1	7710 A 2	6745 A 3	3769 A 3	3752 A 2	3725 A 3	3712 A 2	3700 A 1	2744 A 3	2711 A 2
7760 A 2	7711 A 2	6746 A 3	3780 A 3	3753 A 2	3726 A 3	3713 A 2	3701 A 1	2746 A 3	2712 A 3
7761 A 3	7714 A 2	6750 A 2	3781 A 3	3754 A 2	3730 A 2	3714 A 2	3702 A 1	2750 A 2	2713 A 2
7762 A 3	7716 A 2	6751 A 2	3782 A 2	3760 A 2	3731 A 3	3715 A 2	3703 A 2	2751 A 2	2714 A 2
7763 A 2	7724 A 3	6761 A 2	5750 A 3	3761 A 2	3732 A 1	3716 A 2	3704 A 1	2752 A 2	2715 A 2
7780 A 2	7725 A 3	6762 A 2	5751 A 2	3762 A 3	3740 A 3	3717 A 2	3705 A 2	2753 A 2	2716 A 2

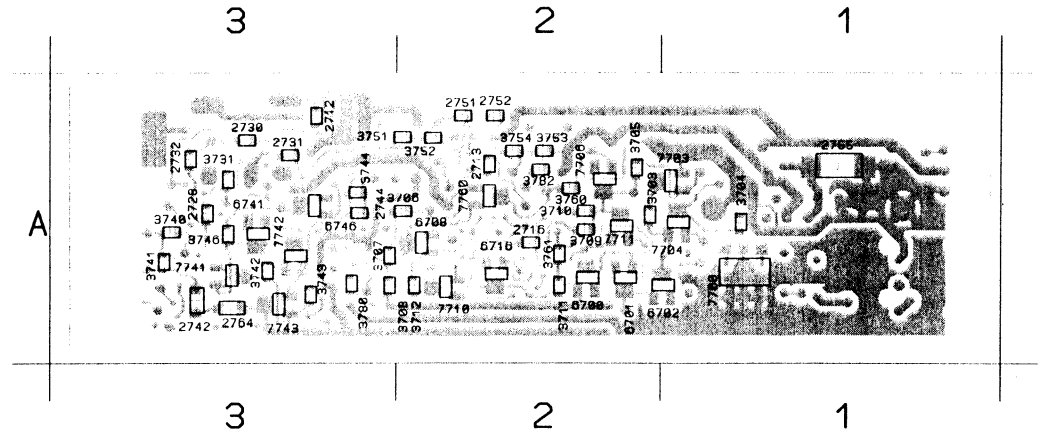

7.3.1 POWER SUPPLY

1700 A 1 1701 G19 1701 I19 2711 D13 2728 F10 2744 I13 2753 H15 3700 A 6 3705 C 6 3710 B12 3715 D14 3721 G 5 3726 F 8 3741 H11 3751 H15 3761 C12 3766 G 7 5750 G14 6708 B11 6750 G15 6765 I 6 7710 B13 7725 F 6 7743 I12 7762 I 5
1700 A 1 1701 G19 1701 I19 2714 D13 2730 H 7 2746 H13 2754 H17 3701 A 6 3706 B10 3711 C13 3716 C15 3722 F 6 3730 K 7 3742 I12 3752 I15 3762 I 5 3767 H 4 6751 H15 7700 B 5 7711 C12 7726 G 9 7744 I14 7763 I 4
1700 A 1 1701 H19 1702 E 1 2715 C16 2731 I 7 2750 H15 2755 H17 3702 B 6 3707 B10 3712 C13 3717 C15 3723 F 6 3731 E 6 3743 I12 3753 I16 3763 I 3 6768 H 6 6761 D13 7703 C 5 7714 E15 7728 E 8 7755 H16 7780 A10
1701 F19 1701 H19 1720 E 4 2716 C16 2732 E 8 2751 I15 2756 H14 3703 C 6 3708 B11 3713 D13 3724 F 7 3732 A 5 3744 I13 3754 I16 3764 I 3 6780 A10 6762 E 5 6741 H12 7704 C 5 7716 D17 7741 I11 7760 B10
1701 G19 1701 I19 2708 B11 2720 F 3 2742 H13 2752 I15 2763 I 4 3704 C 5 3709 B12 3714 E14 3720 F 5 3725 F 8 3740 H11 3746 H13 3760 C11 3765 I 3 3781 B10 6745 I13 6764 H 6 7706 C11 7724 F 8 7742 H12 7761 I 6

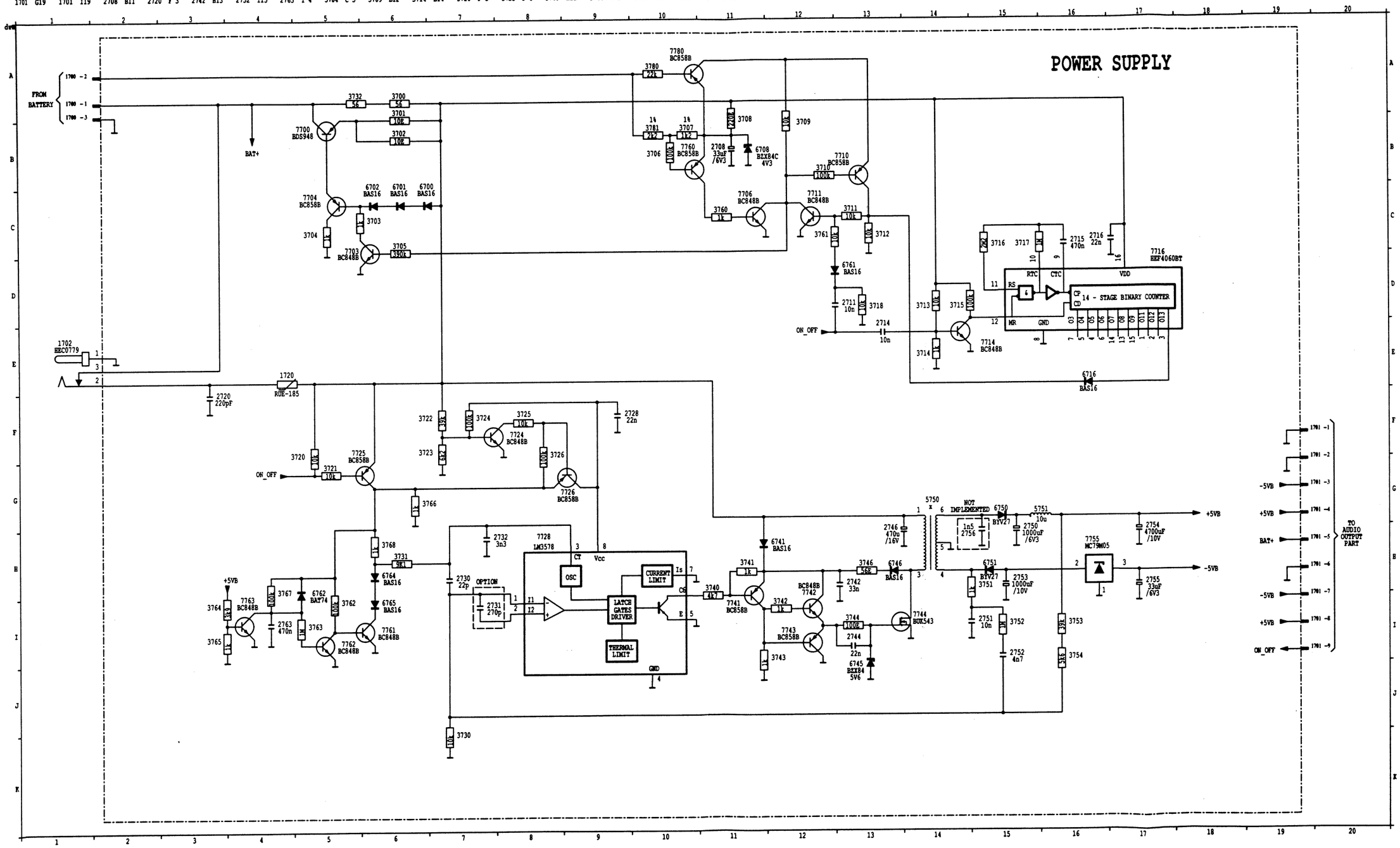

7.3.2 SERVO & DECODER PART

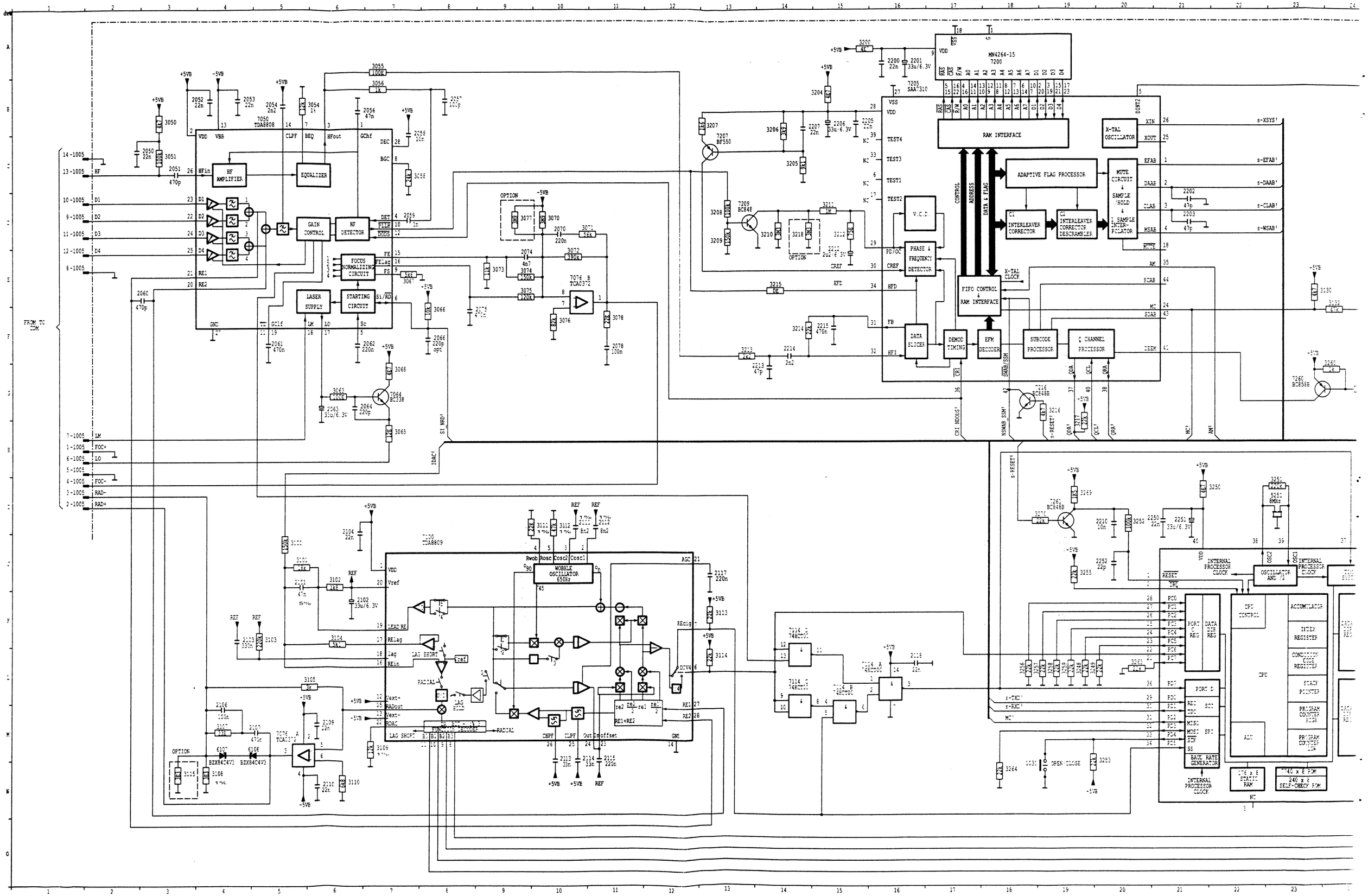

SERVO & DECODER PART

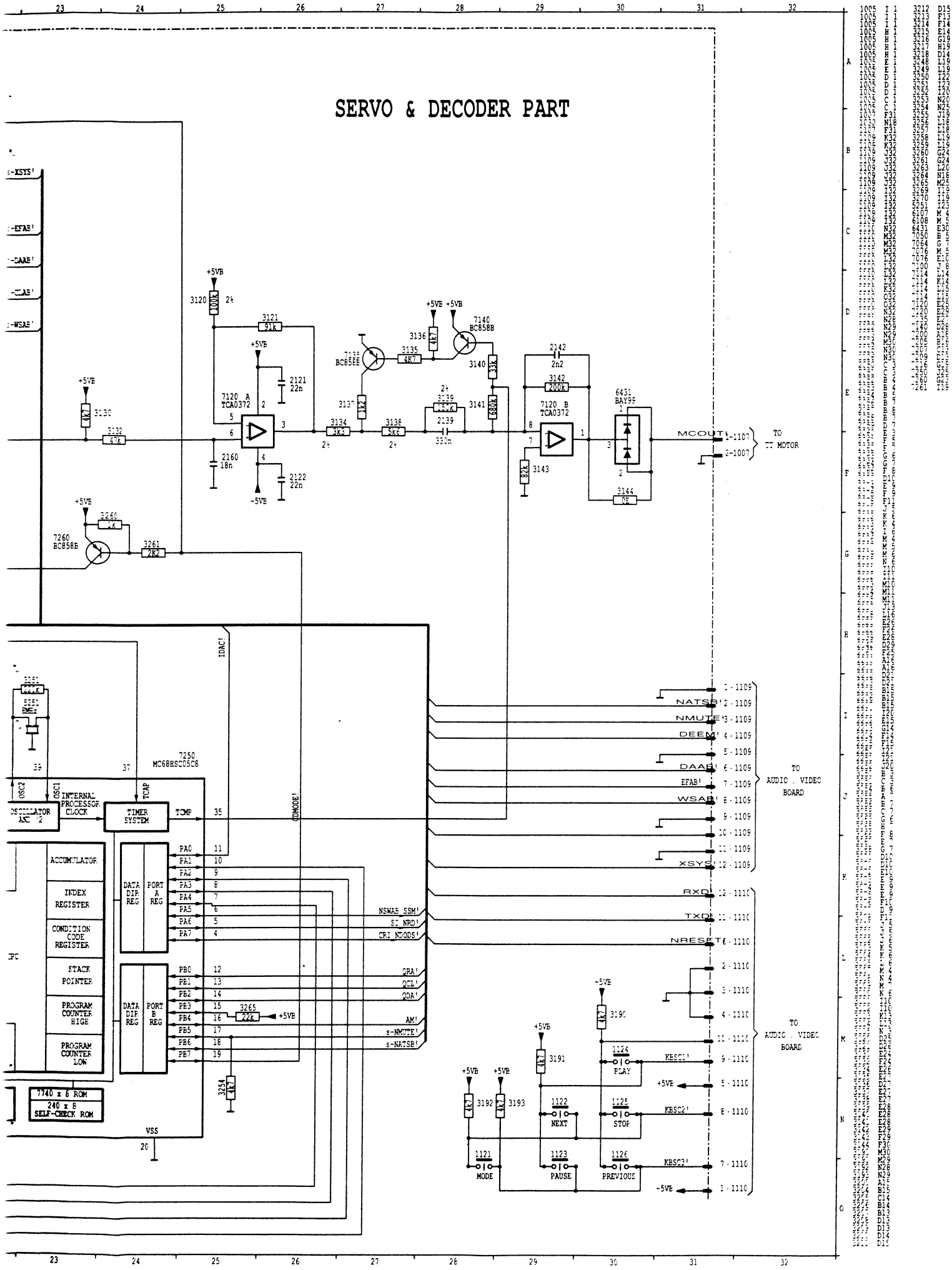

7.3.2 PCB LAYOUT OF SERVO PANEL

7209 C 5	6108 A 2	3256 B 5	3214 C 5	3192 A 5	3134 A 1	3107 A 2	3072 A 2	3050 A 3	2202 C 4	2112 A 4	2070 A 2	2052 A 3	1105 A 3
7216 C 4	6131 A 2	3257 B 5	3215 C 5	3193 B 1	3135 A 1	3108 A 2	3073 A 2	3051 A 3	2203 C 4	2113 A 4	2074 A 2	2053 A 3	1107 A 1
7250 A 4	7050 A 3	32[illegible] B 5	3216 B 4	3200 C 5	3136 A 1	3109 A 4	3074 A 2	3054 A 3	2205 C 5	2114 A 4	2075 A 2	2054 A 3	1109 C 5
7260 C 5	7064 A 3	32[illegible] B 5	3217 C 5	3204 C 5	313[illegible] A 1	3110 A 2	3075 A 2	3055 A 3	2206 C 5	2115 A 4	2078 A 2	2056 A 3	1110 B 1
7261 A 5	7076 A 2	3260 C 5	3218 B 4	3205 C 5	3138 A 1	3111 A 4	3076 A 2	3056 A 3	2207 C 5	2117 A 4	2101 A 4	2057 A 3	1121 B 5
	7100 A 4	3261 C 5	3248 B 5	3206 C 5	3139 A 1	3112 A 4	3077 A 2	3058 A 3	2210 A 5	2118 B 1	2102 A 4	2058 A 3	1122 A 1
	7114 B 1	3263 B 4	3249 B 5	3207 C 5	3140 A 1	3113 A 4	3078 A 2	3063 A 2	2212 C 4	2121 A 1	2103 A 4	2059 A 3	1123 B 1
	7120 A 1	3264 A 5	3250 A 5	3208 C 4	3141 A 1	3114 A 4	3100 A 4	3065 A 2	2213 B 5	2122 A 1	2104 A 4	2060 A 3	1124 B 1
	7135 A 1	3265 B 4	3251 A 5	3209 C 4	3142 A 1	3115 A 2	3101 A 4	3066 A 3	2214 B 5	2139 A 1	2106 A 2	2061 A 2	1125 C 1
	7140 A 1	3269 A 5	3252 A 4	3210 C 4	3143 A 1	3120 A 1	3102 A 4	3067 A 3	2215 C 5	2142 A 1	2107 A 2	2062 A 3	1126 C 1
	7200 C 5	3270 A 5	3253 A 5	3211 C 5	3144 A 1	3121 A 1	3103 A 4	3068 A 2	2250 A 5	2160 A 2	2109 A 2	2063 A 2	1130 B 1
	7205 C 5	5251 A 5	3254 B 4	3212 C 5	3190 B 2	3130 C 5	3104 A 4	3070 A 2	2251 A 5	2200 C 5	2110 A 2	2064 A 2	2050 A 3
	7207 C 5	6107 A 2	3255 A 4	3213 B 5	3191 B 1	3132 A 2	3105 A 3	3071 A 2	2252 A 4	2201 C 5	2111 A 4	2066 A 3	2051 A 3

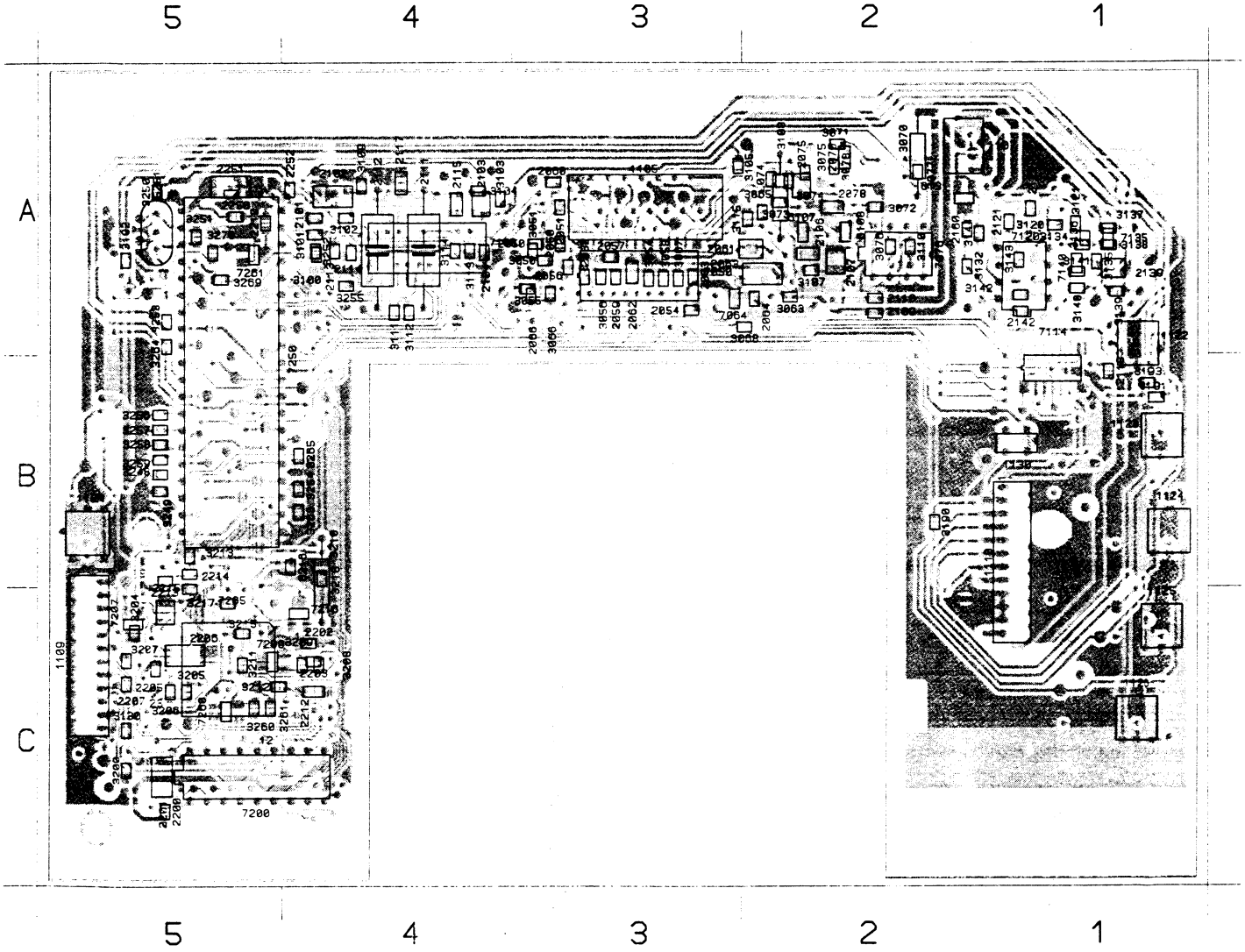

1200 C 5	2375 A 1	2504 C 1	2543 B 1	2601 B 3	2603 A 3	3377 A 2	3422 A 3	3464 A 4	3555 B 3	3586 B 4	3637 B 3	3678 B 4	5048 B 4	7573 C 4					
1301 B 3	2376 A 1	2507 C 2	2545 B 1	2602 B 3	2604 A 4	3378 A 2	3424 A 3	3465 A 4	3556 C 3	3587 C 2	3638 B 3	3680 A 4	5082 A 4	7574 B 3					
1302 A 4	2377 A 1	2511 C 2	2547 B 1	2603 B 3	2605 A 4	3379 A 2	3425 A 3	3469 A 4	3557 C 3	3588 C 3	3641 A 4	3681 A 4	5083 A 3	7575 B 3					
1306 A 4	2380 A 2	2512 C 2	2548 C 3	2604 B 3	2606 A 3	3380 A 2	3426 A 3	3471 A 3	3558 B 3	3589 C 1	3642 B 4	3684 A 4	5084 A 3	7576 C 5					
1309 A 1	2381 A 2	2513 C 2	2549 B 2	2605 B 3	2607 B 3	3381 A 2	3427 B 5	3472 A 3	3559 C 3	3590 C 1	3643 B 4	3685 B 4	6480 A 3	7579 B 4					
1310 B 5	2382 A 2	2514 C 1	2550 B 1	2611 B 3	2608 B 3	3382 A 2	3430 A 5	3501 C 1	3560 B 2	3591 C 1	3644 B 4	3686 B 4	6461 A 3	7580 C 1					
1311 B 5	2383 A 2	2515 C 2	2551 B 1	2629 B 2	2609 B 4	3383 A 2	3430 A 5	3502 C 2	3561 C 3	3592 C 1	3645 A 3	3687 A 3	6524 B 1	7601 B 3					
1312 A 5	2384 A 2	2516 C 2	2552 B 2	2630 B 2	2690 B 4	3384 A 2	3439 A 5	3511 C 2	3563 C 3	3593 B 1	3647 B 4	3688 A 3	6575 B 3	7605 B 3					
1600 B 4	2400 A 3	2517 C 1	2553 B 2	2631 B 2	2691 B 3	3385 A 2	3440 B 5	3526 B 1	3564 C 3	3594 B 1	3649 A 4	3691 B 3	6691 B 3	7609 B 2					
2350 A 1	2402 A 3	2518 C 3	2555 B 3	2635 C 1	2692 B 4	3390 A 2	3441 A 5	3529 B 1	3565 C 3	3595 B 1	3651 A 3	3692 B 3	7350 A 1	7629 B 2					
2351 A 1	2403 A 3	2519 B 1	2557 B 2	2636 B 1	3350 A 1	3391 A 2	3442 A 5	3530 C 1	3566 C 3	3596 C 3	3652 A 3	3693 B 3	7400 A 3	7630 B 2					
2352 A 2	2404 A 3	2521 C 1	2558 B 2	2638 B 3	3352 A 2	3392 A 2	3443 A 5	3531 C 1	3567 B 2	3597 B 1	3653 A 3	3694 B 3	7428 A 5	7631 B 2					
2353 A 1	2405 A 3	2522 B 1	2561 C 3	2640 B 3	3354 A 2	3393 A 2	3444 A 5	3532 C 1	3568 B 2	3598 C 2	3654 A 3	3695 B 3	7445 B 5	7640 B 3					
2354 A 2	2406 A 3	2523 C 1	2562 C 3	2641 A 3	3356 A 1	3394 A 2	3445 A 5	3533 C 1	3569 C 1	3599 C 2	3655 A 3	3696 B 3	7446 C 5	7651 A 3					
2355 A 1	2410 A 2	2524 C 1	2563 C 3	2643 A 3	3357 A 1	3395 A 2	3447 B 5	3534 C 1	3570 B 3	3601 B 3	3657 A 3	5357 A 1	7450 A 5	7652 A 3					
2356 A 1	2414 A 3	2525 C 1	2569 C 1	2644 B 4	3358 A 1	3400 A 3	3448 C 5	3535 C 1	3571 B 3	3602 B 3	3658 A 3	5360 A 1	7452 A 3	7662 A 4					
2357 A 1	2420 A 5	2526 B 1	2571 C 4	2645 B 3	3359 A 1	3401 A 3	3450 A 4	3536 C 1	3572 B 3	3603 B 3	3661 A 4	5368 A 2	7455 A 5	7665 A 3					
2358 A 1	2421 B 5	2527 C 1	2573 C 4	2648 B 3	3360 A 1	3402 A 3	3451 A 5	3537 C 1	3573 B 3	3604 B 4	3662 A 4	5383 A 2	7457 A 3	7666 B 3					
2359 A 1	2422 A 5	2528 B 1	2575 B 2	2651 A 3	3361 A 1	3403 A 3	3452 A 3	3538 C 1	3574 B 3	3605 B 3	3663 A 4	5503 C 1	7460 A 4	7672 A 4					
2360 A 1	2423 B 5	2530 B 1	2576 C 5	2652 A 3	3365 A 2	3404 A 2	3453 B 5	3539 C 1	3575 B 3	3613 B 1	3664 A 4	5510 C 3	7461 A 3	7675 A 4					
2361 A 1	2424 A 5	2531 C 1	2578 B 5	2661 A 3	3366 A 2	3405 A 3	3455 A 4	3541 C 3	3576 B 3	3614 B 2	3665 A 3	5511 C 3	7470 A 3	7676 A 4					
2365 A 2	2428 B 5	2532 C 1	2585 C 3	2662 B 4	3367 A 2	3406 A 3	3456 A 5	3542 C 3	3577 C 3	3615 B 1	3667 A 4	5512 B 2	7471 A 3	7680 B 3					
2366 A 2	2429 A 5	2533 C 2	2586 B 4	2663 A 3	3368 A 2	3410 A 2	3457 A 3	3545 B 1	3578 C 3	3616 B 3	3668 B 4	5513 C 2	7511 C 2	7681 A 4					
2367 A 2	2430 A 5	2534 C 2	2592 C 1	2670 A 4	3369 A 2	3412 A 2	3458 A 3	3546 B 1	3579 B 4	3617 B 2	3670 A 4	5515 B 3	7515 C 1	7685 B 4					
2368 A 2	2432 A 5	2535 B 2	2594 C 1	2671 A 4	3370 A 2	3414 A 3	3459 B 5	3547 B 1	3581 C 3	3629 B 2	3672 A 4	5520 C 1	7530 C 2						
2369 A 2	2433 C 5	2537 B 2	2595 C 1	2672 A 4	3373 A 2	3415 A 3	3460 A 4	3548 B 2	3582 B 2	3630 B 2	3673 A 4	5525 C 1	7531 C 1						
2371 A 2	2445 A 5	2540 B 1	2596 B 1	2673 A 4	3374 A 1	3416 A 3	3461 A 3	3549 B 1	3583 C 2	3631 B 2	3674 A 4	5561 C 3	7540 B 1						
2373 A 2	2460 A 4	2541 B 1	2597 C 1	2681 A 4	3375 A 2	3420 A 5	3462 A 4	3553 C 3	3584 B 2	3635 C 1	3675 A 4	5635 B 1	7555 C 3						
2374 A 1	2503 C 1	2542 B 2	2598 C 1	2682 A 4	3376 A 2	3421 B 5	3463 A 4	3554 C 3	3585 C 3	3636 B 1	3677 B 4	5643 B 4	7571 C 3						

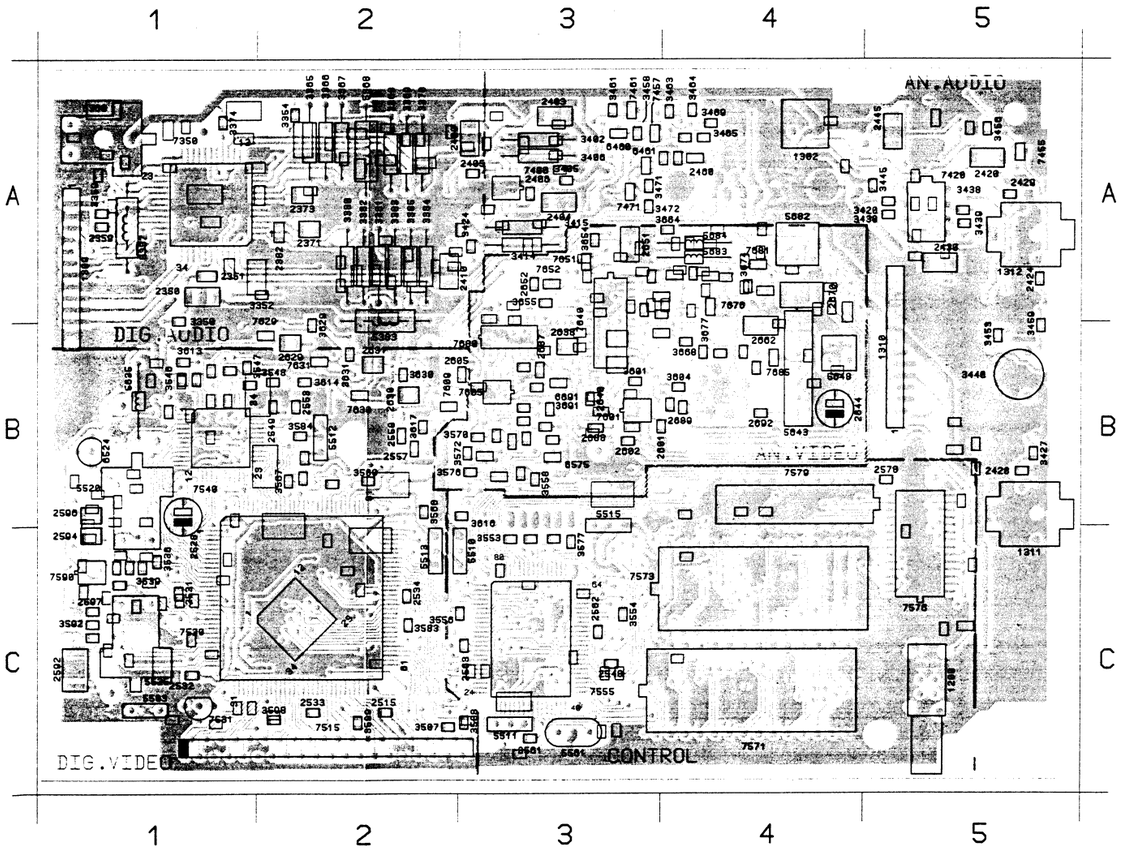

7573 C 4	5048 B 4	3678 B 4	3637 B 3	3586 B 4	3555 B 3	3464 A 4	3422 A 3	3377 A 2	2603 A 3	2601 B 3	2543 B 1	2504 C 1	2375 A 1	1200 C 5					
7574 B 3	5082 A 4	3680 A 4	3638 B 3	3587 C 2	3556 C 3	3465 A 4	3424 A 3	3378 A 2	2604 A 4	2602 B 3	2545 B 1	2507 C 2	2376 A 1	1301 B 3					
7575 B 3	5083 A 3	3681 A 4	3641 A 4	3588 C 3	3557 C 3	3469 A 4	3425 A 3	3379 A 2	2605 A 4	2603 B 3	2547 B 1	2511 C 2	2377 A 1	1302 A 4					
7576 C 5	5084 A 3	3684 A 4	3642 B 4	3589 C 1	3558 B 3	3471 A 3	3426 A 3	3380 A 2	2606 A 3	2604 B 3	2548 C 3	2512 C 2	2380 A 2	1306 A 4					
7579 B 4	6480 A 3	3685 B 4	3643 B 4	3590 C 1	3559 C 3	3472 A 3	3427 B 5	3381 A 2	2607 B 3	2605 B 3	2549 B 2	2513 C 2	2381 A 2	1309 A 1					
7580 C 1	6461 A 3	3686 B 4	3644 B 4	3591 C 1	3560 B 2	3501 C 1	3430 A 5	3382 A 2	2608 B 3	2611 B 3	2550 B 1	2514 C 1	2382 A 2	1310 B 5					
7601 B 3	6524 B 1	3687 A 3	3645 A 3	3592 C 1	3561 C 3	3502 C 2	3438 A 5	3383 A 2	2609 B 4	2629 B 2	2551 B 1	2515 C 2	2383 A 2	1311 B 5					
7605 B 3	6575 B 3	3688 A 3	3647 B 4	3593 B 1	3563 C 3	3511 C 2	3439 A 5	3384 A 2	2690 B 4	2630 B 2	2552 B 2	2516 C 2	2384 A 2	1312 A 5					
7609 B 2	6691 B 3	3691 B 3	3649 A 4	3594 B 1	3564 C 3	3526 B 1	3440 B 5	3385 A 2	2691 B 3	2631 B 2	2553 B 2	2517 C 1	2400 A 3	1600 B 4					
7629 B 2	7350 A 1	3692 B 3	3651 A 3	3595 B 1	3565 C 3	3529 B 1	3441 A 5	3390 A 2	2692 B 4	2635 C 1	2555 B 3	2518 C 3	2402 A 3	2350 A 1					
7630 B 2	7400 A 3	3693 B 3	3652 A 3	3596 C 3	3566 C 3	3530 C 1	3442 A 5	3391 A 2	3350 A 1	2636 B 1	2557 B 2	2519 B 1	2403 A 3	2351 A 1					
7631 B 2	7428 A 5	3694 B 3	3653 A 3	3597 B 1	3567 B 2	3531 C 1	3443 A 5	3392 A 2	3352 A 2	2638 B 3	2558 B 2	2521 C 1	2404 A 3	2352 A 2					
7640 B 3	7445 B 5	3695 B 3	3654 A 3	3598 C 2	3568 B 2	3532 C 1	3444 A 5	3393 A 2	3354 A 2	2640 B 3	2561 C 3	2522 B 1	2405 A 3	2353 A 1					
7651 A 3	7446 C 5	3696 B 3	3655 A 3	3599 C 2	3569 C 1	3533 C 1	3445 A 5	3394 A 2	3356 A 1	2641 A 3	2562 C 3	2523 C 1	2406 A 3	2354 A 2					
7652 A 3	7450 A 5	5357 A 1	3657 A 3	3601 B 3	3570 B 3	3534 C 1	3447 B 5	3395 A 2	3357 A 1	2643 A 3	2563 C 3	2524 C 1	2410 A 2	2355 A 1					
7662 A 4	7452 A 3	5360 A 1	3658 A 3	3602 B 3	3571 B 3	3535 C 1	3448 C 5	3400 A 3	3358 A 1	2644 B 4	2569 C 1	2525 C 1	2414 A 3	2356 A 1					
7665 A 3	7455 A 5	5368 A 2	3661 A 4	3603 B 3	3572 B 3	3536 C 1	3450 A 4	3401 A 3	3359 A 1	2645 B 3	2571 C 4	2526 B 1	2420 A 5	2357 A 1					
7666 B 3	7457 A 3	5383 A 2	3662 A 4	3604 B 4	3573 B 3	3537 C 1	3451 A 5	3402 A 3	3360 A 1	2648 B 3	2573 C 4	2527 C 1	2421 B 5	2358 A 1					
7672 A 4	7460 A 4	5503 C 1	3663 A 4	3605 B 3	3574 B 3	3538 C 1	3452 A 3	3403 A 3	3361 A 1	2651 A 3	2575 B 2	2528 B 1	2422 A 5	2359 A 1					
7675 A 4	7461 A 3	5510 C 3	3664 A 4	3613 B 1	3575 B 3	3539 C 1	3453 B 5	3404 A 2	3365 A 2	2652 A 3	2576 C 5	2530 B 1	2423 B 5	2360 A 1					
7676 A 4	7470 A 3	5511 C 3	3665 A 3	3614 B 2	3576 B 3	3541 C 3	3455 A 4	3405 A 3	3366 A 2	2661 A 3	2578 B 5	2531 C 1	2424 A 5	2361 A 1					
7680 B 3	7471 A 3	5512 B 2	3667 A 4	3615 B 1	3577 C 3	3542 C 3	3456 A 5	3406 A 3	3367 A 2	2662 B 4	2585 C 3	2532 C 1	2428 B 5	2365 A 2					
7681 A 4	7511 C 2	5513 C 2	3668 B 4	3616 B 3	3578 C 3	3545 B 1	3457 A 3	3410 A 2	3368 A 2	2663 A 3	2586 B 4	2533 C 2	2429 A 5	2366 A 2					
7685 B 4	7515 C 1	5515 B 3	3670 A 4	3617 B 2	3579 B 4	3546 B 1	3458 A 3	3412 A 2	3369 A 2	2670 A 4	2592 C 1	2534 C 2	2430 A 5	2367 A 2					
	7530 C 2	5520 C 1	3672 A 4	3629 B 2	3581 C 3	3547 B 1	3459 B 5	3414 A 3	3370 A 2	2671 A 4	2594 C 1	2535 B 2	2432 A 5	2368 A 2					
	7531 C 1	5525 C 1	3673 A 4	3630 B 2	3582 B 2	3548 B 2	3460 A 4	3415 A 3	3373 A 2	2672 A 4	2595 C 1	2537 B 2	2433 C 5	2369 A 2					
	7540 B 1	5561 C 3	3674 A 4	3631 B 2	3583 C 2	3549 B 1	3461 A 3	3416 A 3	3374 A 1	2673 A 4	2596 B 1	2540 B 1	2445 A 5	2371 A 2					
	7555 C 3	5635 B 1	3675 A 4	3635 C 1	3584 B 2	3553 C 3	3462 A 4	3420 A 5	3375 A 2	2681 A 4	2597 C 1	2541 B 1	2468 A 4	2373 A 2					
	7571 C 3	5643 B 4	3677 B 4	3636 B 1	3585 C 3	3554 C 3	3463 A 4	3421 B 5	3376 A 2	2682 A 4	2598 C 1	2542 B 2	2503 C 1	2374 A 1					

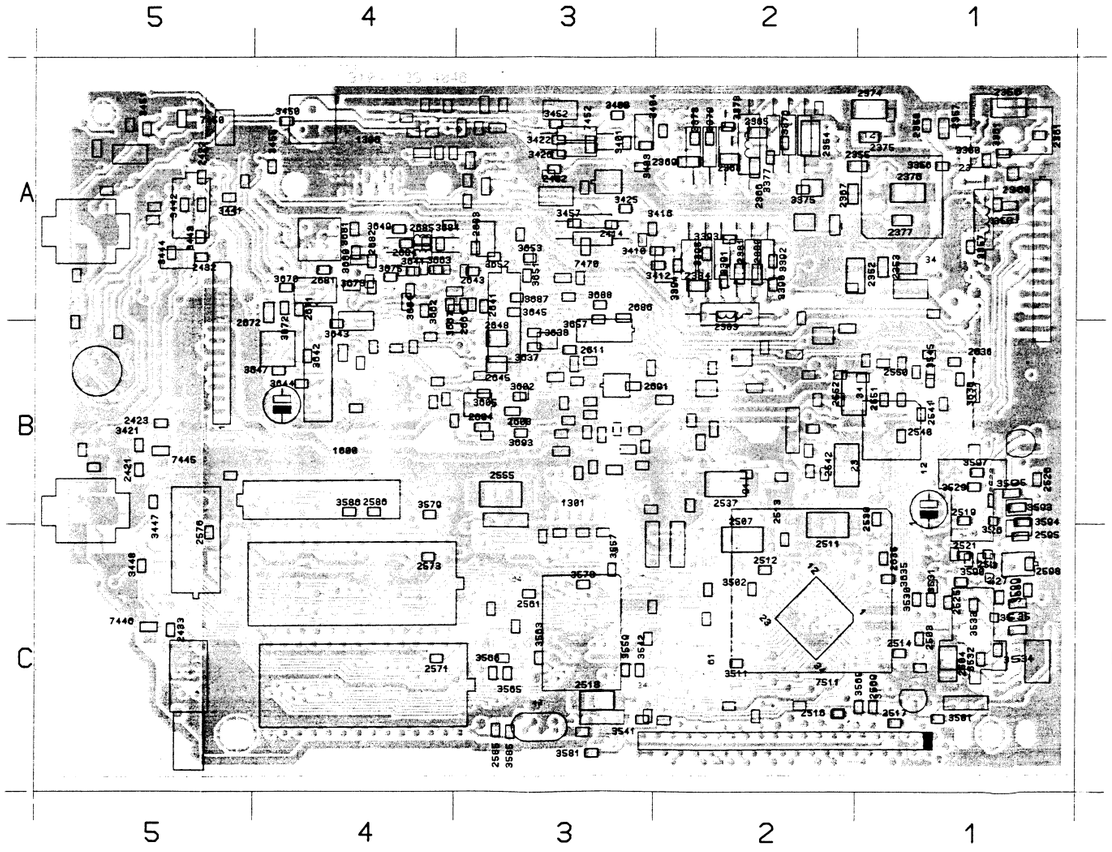

7.3.4 AUDIO OUTPUT PART

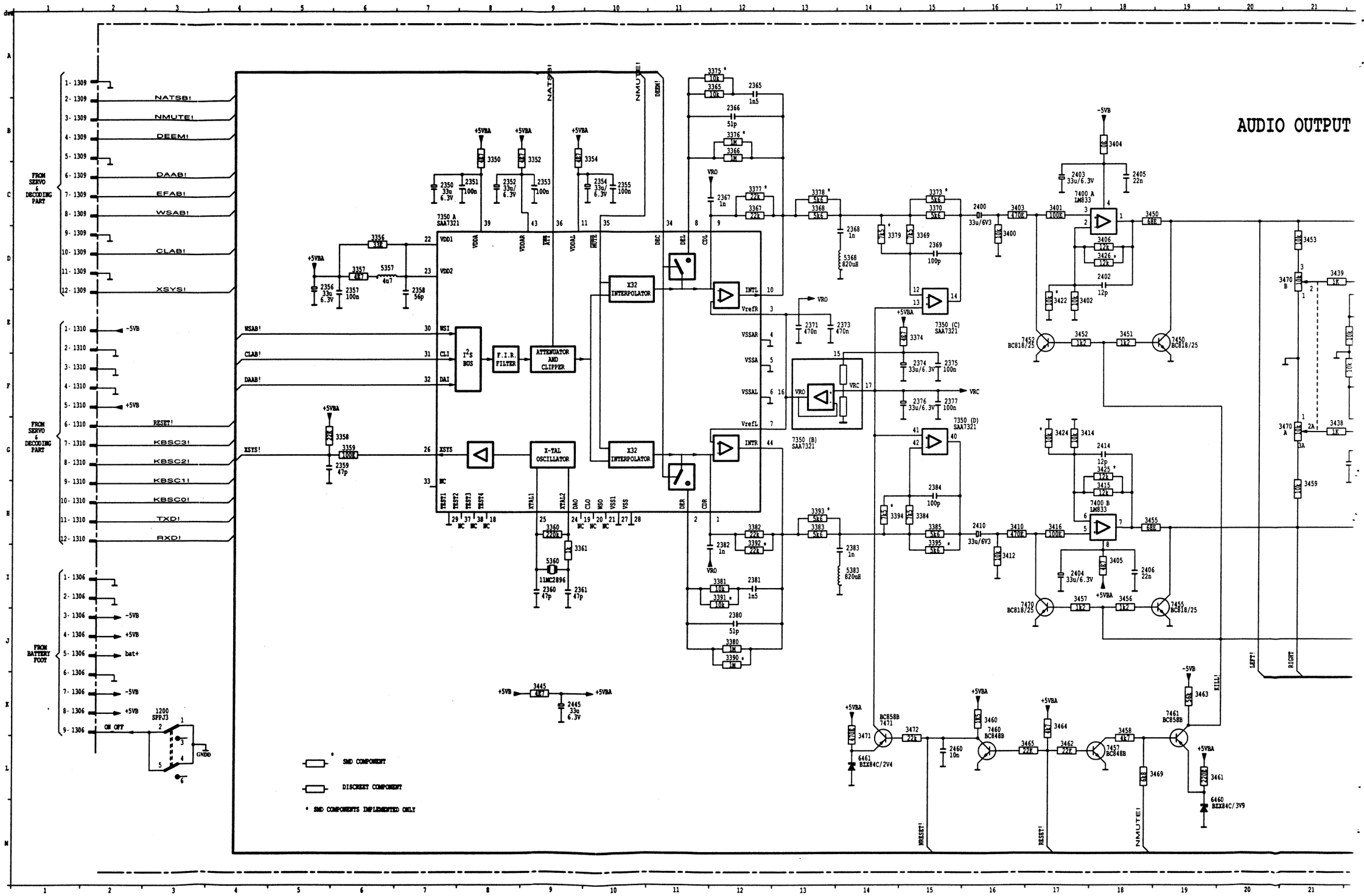

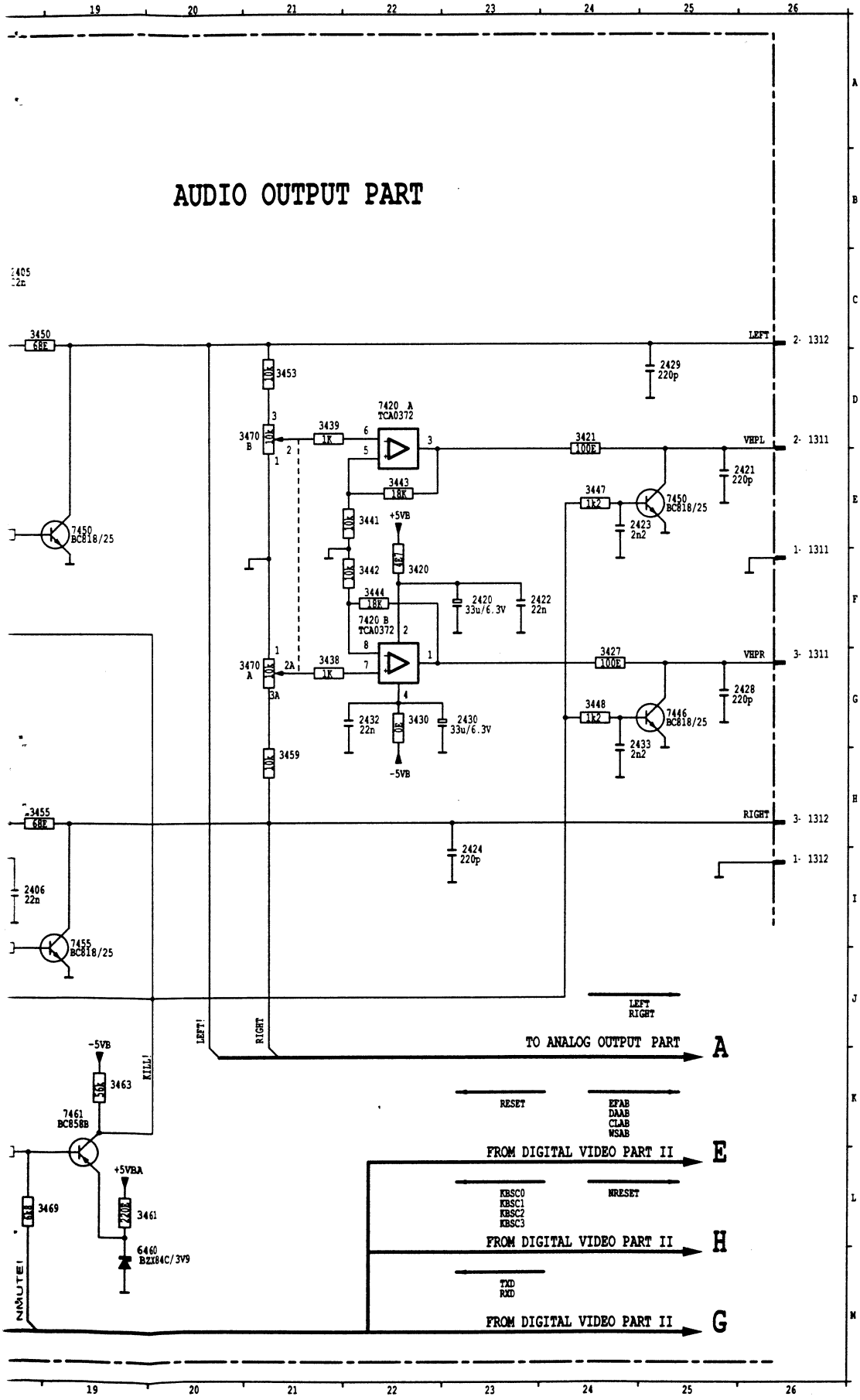

	1200	K 3	3443	E22
	1306	K 2	3444	F22
	1306	K 2	3445	L 5
	1306	K 2	3445	L 5
	1306	K 2	3445	K 9
	1306	J 2	3447	E24
	1306	J 2	3448	G24
	1306	J 2	3450	C18
A	1306	I 2	3451	E18
	1306	I 2	3452	E17
	1309	E 2	3453	D21
	1309	D 2	3455	H18
	1309	D 2	3456	I18
	1309	D 2	3457	I17
	1309	C 2	3458	K18
	1309	C 2	3459	H21
	1309	C 2	3460	K16
	1309	B 2	3461	L20
	1309	B 2	3462	L17
	1309	B 2	3463	K19
B	1309	B 2	3464	K17
	1309	A 2	3465	L17
	1310	H 2	3469	L19
	1310	H 2	3470	G21
	1310	H 2	3470	D21
	1310	H 2	3471	L14
	1310	G 2	3472	K15
	1310	G 2	5357	D 6
	1310	G 2	5360	I 9
	1310	F 2	5368	D14
	1310	F 2	5383	I14
C	1310	F 2	6460	M20
	1310	E 2	6461	L14
	1310	E 2	7350	C 7
	1311	G26	7400	C17
	1311	F26	7400	H17
	1311	D26	7420	F22
	1312	I26	7420	D22
	1312	H26	7446	G25
	1312	C26	7450	E19
	2350	C 7	7450	E25
	2351	C 8	7452	E17
D	2352	C 8	7455	I19
	2353	C 9	7457	L18
	2354	C10	7460	K16
	2355	C10	7461	K19
	2356	D 5	7470	I17
	2357	E 6	7471	K14
	2358	E 7		
	2359	G 6		
	2360	I 9		
	2361	I 9		
E	2365	A12		
	2366	B12		
	2367	C12		
	2368	D14		
	2369	D15		
	2371	E13		
	2373	E14		
	2374	F15		
	2375	F15		
	2376	F15		
	2377	F15		
F	2380	J12		
	2381	I12		
	2382	I12		
	2383	I14		
	2384	H15		
	2400	C16		
	2402	D18		
	2403	C17		
	2404	I17		
	2405	C18		
	2406	I18		
G	2410	H16		
	2414	G18		
	2420	F23		
	2421	E26		
	2422	F24		
	2423	E25		
	2424	I23		
	2428	G26		
	2429	D25		
	2430	G23		
H	2432	G22		
	2433	G25		
	2445	K 9		
	2460	L15		
	3350	B 8		
	3352	B 9		
	3354	B10		
	3356	D 6		
	3357	D 6		
	3358	G 6		
	3359	G 6		
I	3360	H 9		
	3361	I 9		
	3365	A12		
	3366	B12		
	3367	C12		
	3368	C13		
	3369	D15		
	3370	C15		
	3373	C15		
	3374	E15		
	3375	A12		
J	3376	B12		
	3377	C12		
	3378	C13		
	3379	D14		
	3380	J12		
	3381	I12		
	3382	H12		
	3383	H13		
	3384	H15		
	3385	H15		
K	3390	J12		
	3391	I12		
	3392	I12		
	3393	H13		
	3394	H14		
	3395	I15		
	3400	D16		
	3401	C17		
	3402	E17		
	3403	C16		
	3404	B18		
L	3405	I18		
	3406	D18		
	3410	H16		
	3412	I16		
	3414	G17		
	3415	H18		
	3416	H17		
	3420	F22		
	3421	D24		
	3422	E17		
	3424	G17		
	3425	G18		
M	3426	D18		
	3427	G24		
	3430	G22		
	3438	G21		
	3439	D21		
	3441	E22		
	3442	F22		

7.3.5 DIGITAL VIDEO PART I

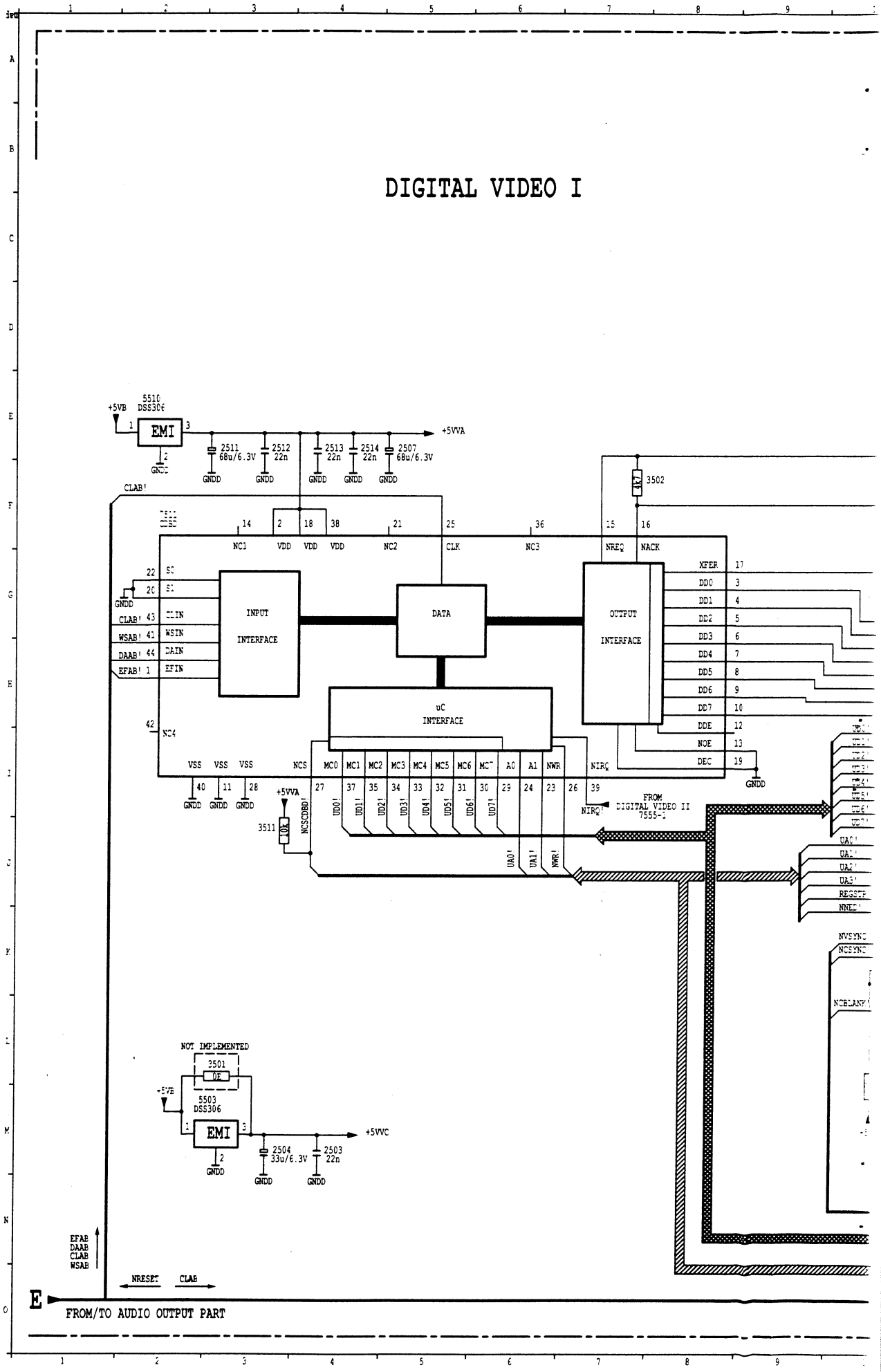

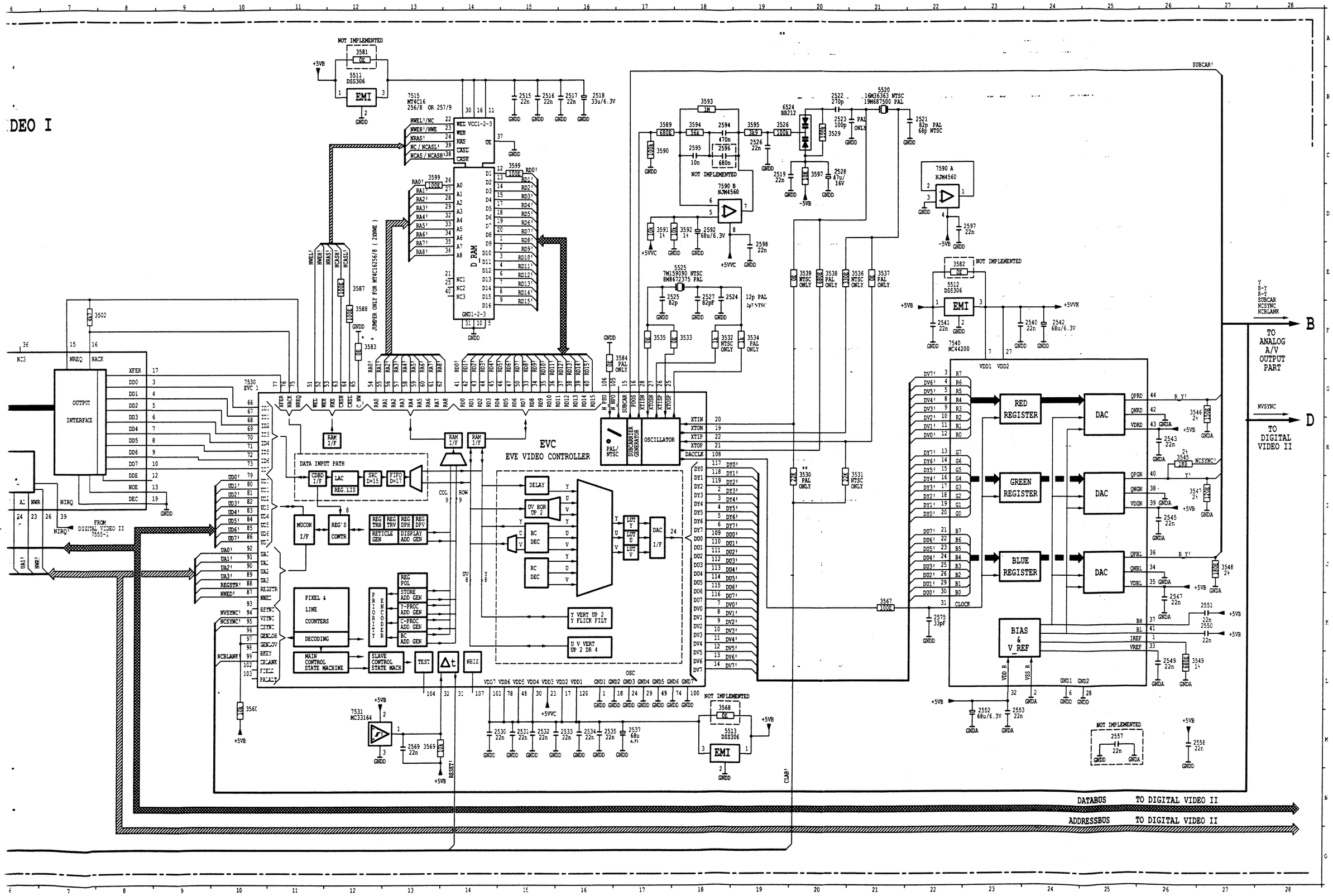

DEO I
EVC
EVE VIDEO CONTROLLER
OUTPUT INTERFACE
D RAM
OSCILLATOR
RED REGISTER
GREEN REGISTER
BLUE REGISTER
DAC
BIAS & V_REF
TO ANALOG A/V OUTPUT PART
TO DIGITAL VIDEO II
DATABUS TO DIGITAL VIDEO II
ADDRESSBUS TO DIGITAL VIDEO II

7.3.6 DIGITAL VIDEO PART II

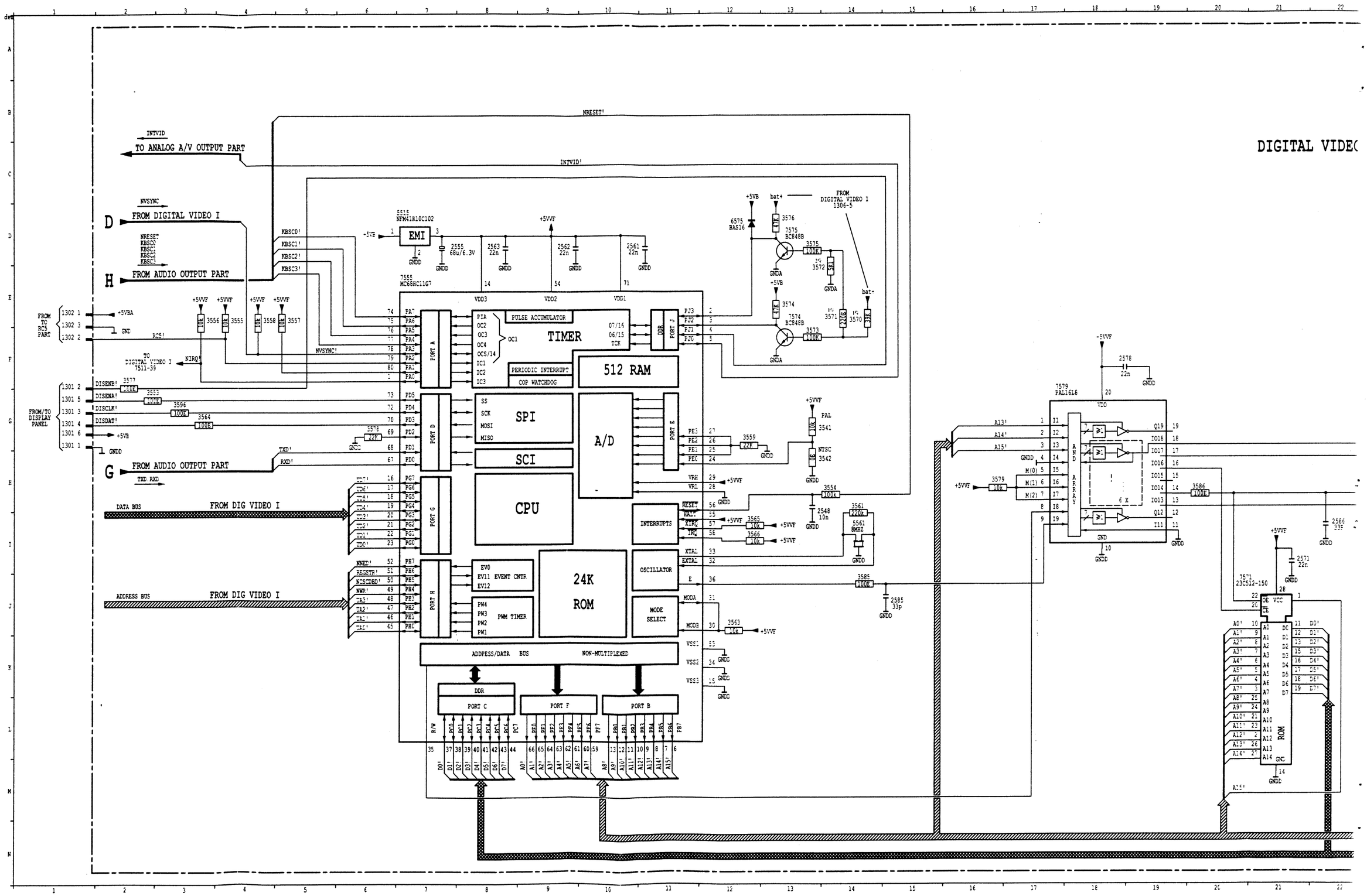

DIGITAL VIDEO II

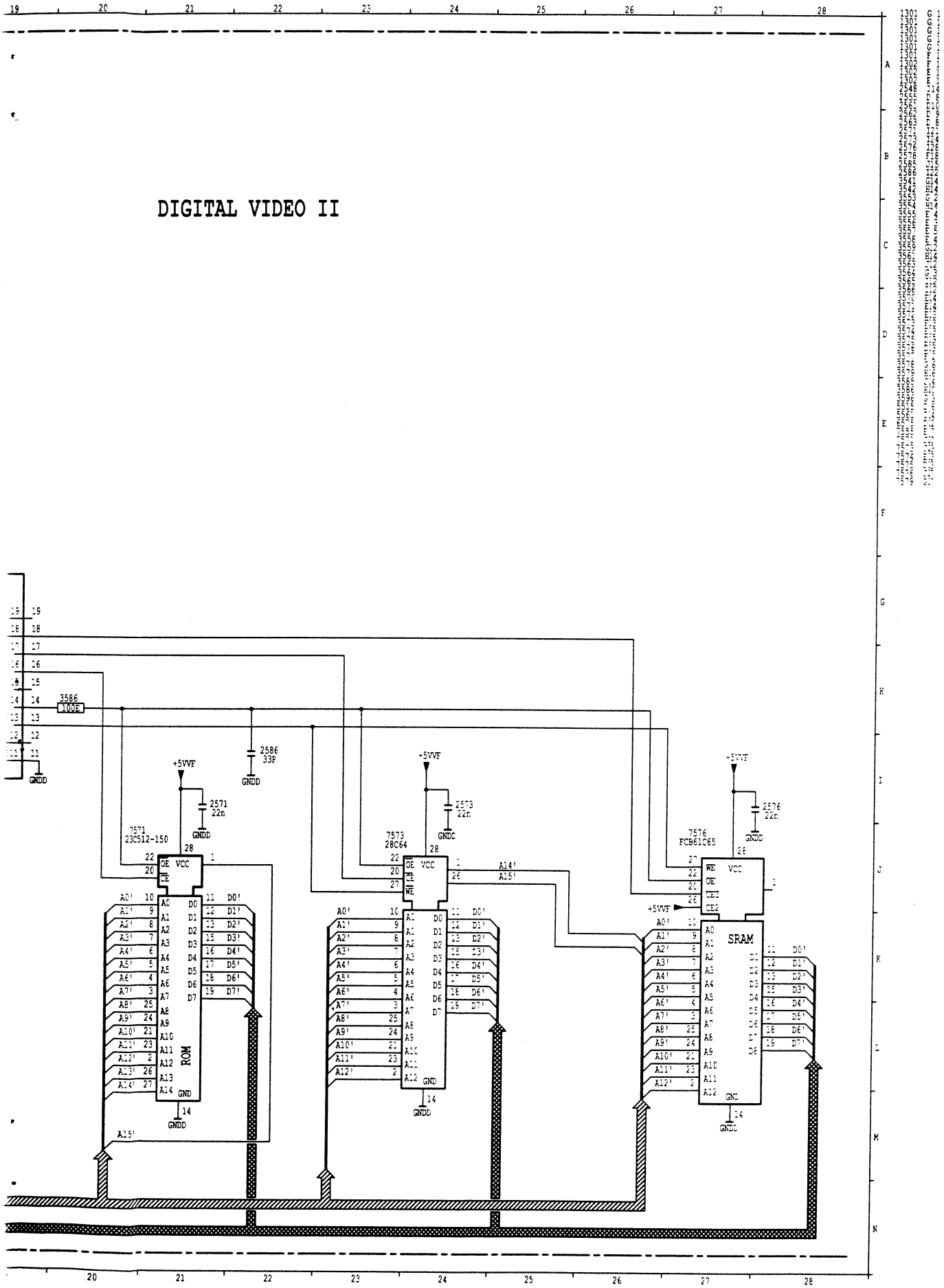

7.3.7 PCB LAYOUT OF AUDIO/VIDEO PANEL

1200 C 5	2375 A 1	2504 C 1	2543 B 1	2601 B 3	2683 A 3	3377
1301 B 3	2376 A 1	2507 C 2	2545 B 1	2602 B 3	2684 A 4	3378
1302 A 4	2377 A 1	2511 C 2	2547 B 1	2603 B 3	2685 A 4	3379
1306 A 4	2380 A 2	2512 C 2	2548 C 3	2604 B 3	2686 A 3	3380
1309 A 1	2381 A 2	2513 C 2	2549 B 2	2605 B 3	2687 B 3	3381
1310 B 5	2382 A 2	2514 C 1	2550 B 1	2611 B 3	2688 B 3	3382
1311 B 5	2383 A 2	2515 C 2	2551 B 1	2620 B 2	2689 B 4	3383
1312 A 5	2384 A 2	2516 C 2	2552 B 2	2630 B 2	2690 B 4	3384
1600 B 4	2400 A 3	2517 C 1	2553 B 2	2631 B 2	2691 B 3	3385
2350 A 1	2402 A 3	2518 C 3	2555 B 3	2635 C 1	2692 B 4	3386
2351 A 1	2403 A 3	2519 B 1	2557 B 2	2636 B 1	3350 A 1	3391
2352 A 2	2404 A 3	2521 C 1	2558 B 2	2638 B 3	3352 A 2	3392
2353 A 1	2405 A 3	2522 B 1	2561 C 3	2640 B 3	3354 A 2	3393
2354 A 2	2406 A 3	2523 C 1	2562 C 3	2641 A 3	3356 A 1	3394
2355 A 1	2410 A 2	2524 C 1	2563 C 3	2643 A 3	3357 A 1	3395
2356 A 1	2414 A 3	2525 C 1	2569 C 1	2644 B 4	3358 A 1	3400
2357 A 1	2420 A 5	2526 B 1	2571 C 4	2645 B 3	3359 A 1	3401
2358 A 1	2421 B 5	2527 C 1	2573 C 4	2648 B 3	3360 A 1	3402
2359 A 1	2422 A 5	2528 B 1	2575 B 2	2651 A 3	3361 A 1	3403
2360 A 1	2423 B 5	2530 B 1	2576 C 5	2652 A 3	3365 A 2	3404
2361 A 1	2424 A 5	2531 C 1	2578 B 5	2661 A 3	3366 A 2	3405
2365 A 2	2428 B 5	2532 C 1	2585 C 3	2662 B 4	3367 A 2	3406
2366 A 2	2429 A 5	2533 C 2	2586 B 4	2663 A 3	3368 A 2	3410
2367 A 2	2430 A 5	2534 C 2	2592 C 1	2670 A 4	3369 A 2	3412
2368 A 2	2432 A 5	2535 B 2	2594 C 1	2671 A 4	3370 A 2	3414
2369 A 2	2433 C 5	2537 B 2	2595 C 1	2672 A 4	3373 A 2	3415
2371 A 2	2445 A 5	2540 B 1	2596 B 1	2673 A 4	3374 A 1	3416
2373 A 2	2460 A 4	2541 B 1	2597 C 1	2681 A 4	3375 A 2	3420
2374 A 1	2503 C 1	2542 B 2	2598 C 1	2682 A 4	3376 A 2	3421

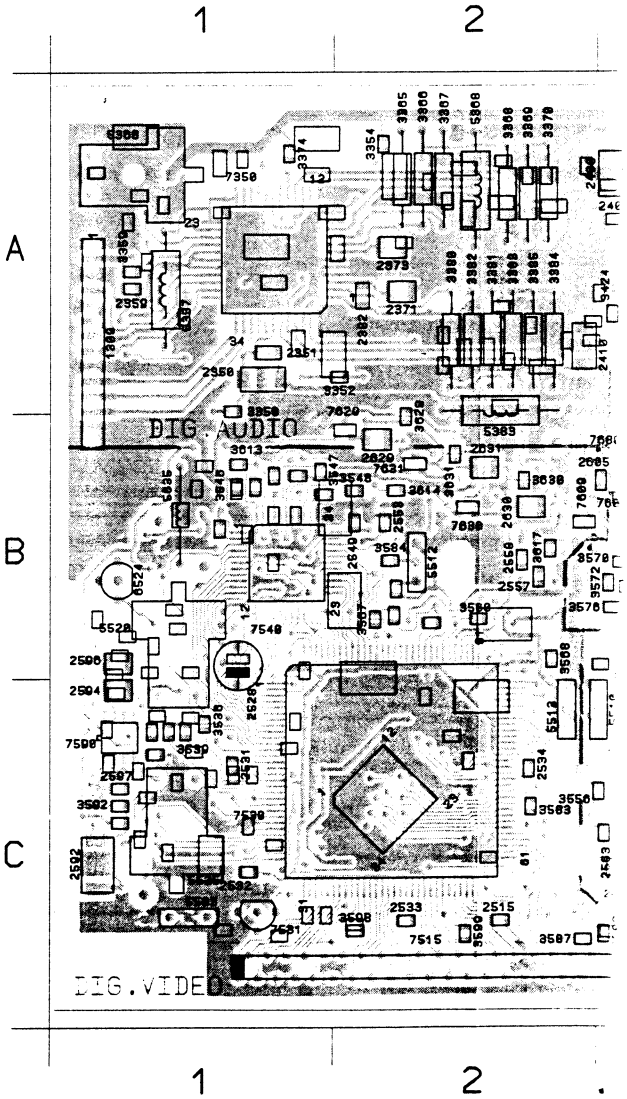

1200 C 5	2375 A 1	2504 C 1	2543 B 1	2601 B 3	2683 A 3	3377 A 2	3422 A 3	3464 A 4	3555 B 3	3586 B 4	3637 B 3	3678 B 4	5648 B 4	7573 C 4					
1301 B 3	2376 A 1	2507 C 2	2545 B 1	2602 B 3	2684 A 4	3378 A 2	3424 A 3	3465 A 4	3556 C 3	3587 C 2	3638 B 3	3680 A 4	5682 A 4	7574 B 3					
1302 A 4	2377 A 1	2511 C 2	2547 B 1	2603 B 3	2685 A 4	3379 A 2	3425 A 3	3469 A 4	3557 C 3	3588 C 3	3641 A 4	3681 A 4	5683 A 3	7575 B 3					
1306 A 4	2380 A 2	2512 C 2	2548 C 3	2604 B 3	2686 A 3	3380 A 2	3426 A 3	3471 A 3	3558 B 3	3589 C 1	3642 B 4	3684 A 4	5684 A 3	7576 C 5					
1309 A 1	2381 A 2	2513 C 2	2549 B 2	2605 B 3	2687 B 3	3381 A 2	3427 B 5	3472 A 3	3559 C 3	3590 C 1	3643 B 4	3685 B 4	6460 A 3	7579 B 4					
1310 B 5	2382 A 2	2514 C 1	2550 B 1	2611 B 3	2688 B 3	3382 A 2	3430 A 5	3501 C 1	3560 B 2	3591 C 1	3644 B 4	3686 B 4	6461 A 3	7580 C 1					
1311 B 5	2383 A 2	2515 C 2	2551 B 1	2629 B 2	2689 B 4	3383 A 2	3438 A 5	3502 C 2	3561 C 3	3592 C 1	3645 A 3	3687 A 3	6524 B 1	7601 B 3					
1312 A 5	2384 A 2	2516 C 2	2552 B 2	2630 B 2	2690 B 4	3384 A 2	3439 A 5	3511 C 2	3563 C 3	3593 B 1	3647 B 4	3688 A 3	6575 B 3	7605 B 3					
1600 B 4	2400 A 3	2517 C 1	2553 B 2	2631 B 2	2691 B 3	3385 A 2	3440 B 5	3526 B 1	3564 C 3	3594 B 1	3649 A 4	3691 B 3	6601 B 3	7609 B 2					
2350 A 1	2402 A 3	2518 C 3	2555 B 3	2635 C 1	2692 B 4	3386 A 2	3441 A 5	3529 B 1	3565 C 3	3595 B 1	3651 A 3	3692 B 3	7350 A 1	7629 B 2					
2351 A 1	2403 A 3	2519 B 1	2557 B 2	2636 B 1	3350 A 1	3391 A 2	3442 A 5	3530 C 1	3566 C 3	3596 C 3	3652 A 3	3693 B 3	7400 A 3	7630 B 2					
2352 A 2	2404 A 3	2521 C 1	2558 B 2	2638 B 3	3352 A 2	3392 A 2	3443 A 5	3531 C 1	3567 B 2	3597 B 1	3653 A 3	3694 B 3	7420 A 5	7631 B 2					
2353 A 1	2405 A 3	2522 B 1	2561 C 3	2640 B 3	3354 A 2	3393 A 2	3444 A 5	3532 C 1	3568 B 2	3598 C 2	3654 A 3	3695 B 3	7445 B 5	7640 B 3					
2354 A 2	2406 A 3	2523 C 1	2562 C 3	2641 A 3	3356 A 1	3394 A 2	3445 A 5	3533 C 1	3569 C 1	3599 C 2	3655 A 3	3696 B 3	7446 C 5	7651 A 3					
2355 A 1	2410 A 2	2524 C 1	2563 C 3	2643 A 3	3357 A 1	3395 A 2	3447 B 5	3534 C 1	3570 B 3	3601 B 3	3657 A 3	5357 A 1	7450 A 5	7652 A 3					
2356 A 1	2414 A 3	2525 C 1	2569 C 1	2644 B 4	3358 A 1	3400 A 3	3448 C 5	3535 C 1	3571 B 3	3602 B 3	3658 A 3	5360 A 1	7452 A 3	7662 A 4					
2357 A 1	2420 A 5	2526 B 1	2571 C 4	2645 B 3	3359 A 1	3401 A 3	3450 A 4	3536 C 1	3572 B 3	3603 B 3	3661 A 4	5366 A 2	7455 A 5	7665 A 3					
2358 A 1	2421 B 5	2527 C 1	2573 C 4	2648 B 3	3360 A 1	3402 A 3	3451 A 5	3537 C 1	3573 B 3	3604 B 4	3662 A 4	5383 A 2	7457 A 3	7666 B 3					
2359 A 1	2422 A 5	2528 B 1	2575 B 2	2651 A 3	3361 A 1	3403 A 3	3452 A 3	3538 C 1	3574 B 3	3605 B 3	3663 A 4	5503 C 1	7460 A 4	7672 A 4					
2360 A 1	2423 B 5	2530 B 1	2576 C 5	2652 A 3	3365 A 2	3404 A 2	3453 B 5	3539 C 1	3575 B 3	3613 B 1	3664 A 4	5510 C 3	7461 A 3	7675 A 4					
2361 A 1	2424 A 5	2531 C 1	2578 B 5	2661 A 3	3366 A 2	3405 A 3	3455 A 4	3541 C 3	3576 B 3	3614 B 2	3665 A 3	5511 C 3	7470 A 3	7676 A 4					
2365 A 2	2428 B 5	2532 C 1	2585 C 3	2662 B 4	3367 A 2	3406 A 3	3456 A 5	3542 C 3	3577 C 3	3615 B 1	3667 A 4	5512 B 2	7471 A 3	7680 B 3					
2366 A 2	2429 A 5	2533 C 2	2586 B 4	2663 A 3	3368 A 2	3410 A 2	3457 A 3	3545 B 1	3578 C 3	3616 B 3	3668 B 4	5513 C 2	7511 C 2	7681 A 4					
2367 A 2	2430 A 5	2534 C 2	2592 C 1	2670 A 4	3369 A 2	3412 A 2	3458 A 3	3546 B 1	3579 B 4	3617 B 2	3670 A 4	5515 B 3	7515 C 1	7685 B 4					
2368 A 2	2432 A 5	2535 B 2	2594 C 1	2671 A 4	3370 A 2	3414 A 3	3459 B 5	3547 B 1	3581 C 3	3629 B 2	3672 A 4	5520 C 1	7530 C 2						
2369 A 2	2433 C 5	2537 B 2	2595 C 1	2672 A 4	3373 A 2	3415 A 3	3460 A 4	3548 B 2	3582 B 2	3630 B 2	3673 A 4	5525 C 1	7531 C 1						
2371 A 2	2445 A 5	2540 B 1	2596 B 1	2673 A 4	3374 A 1	3416 A 3	3461 A 3	3549 B 1	3583 C 2	3631 B 2	3674 A 4	5561 C 3	7540 B 1						
2373 A 2	2460 A 4	2541 B 1	2597 C 1	2681 A 4	3375 A 2	3420 A 5	3462 A 4	3553 C 3	3584 B 2	3635 C 1	3675 A 4	5635 B 1	7555 C 3						
2374 A 1	2503 C 1	2542 B 2	2598 C 1	2682 A 4	3376 A 2	3421 B 5	3463 A 4	3554 C 3	3585 C 3	3636 B 1	3677 B 4	5643 B 4	7571 C 3						

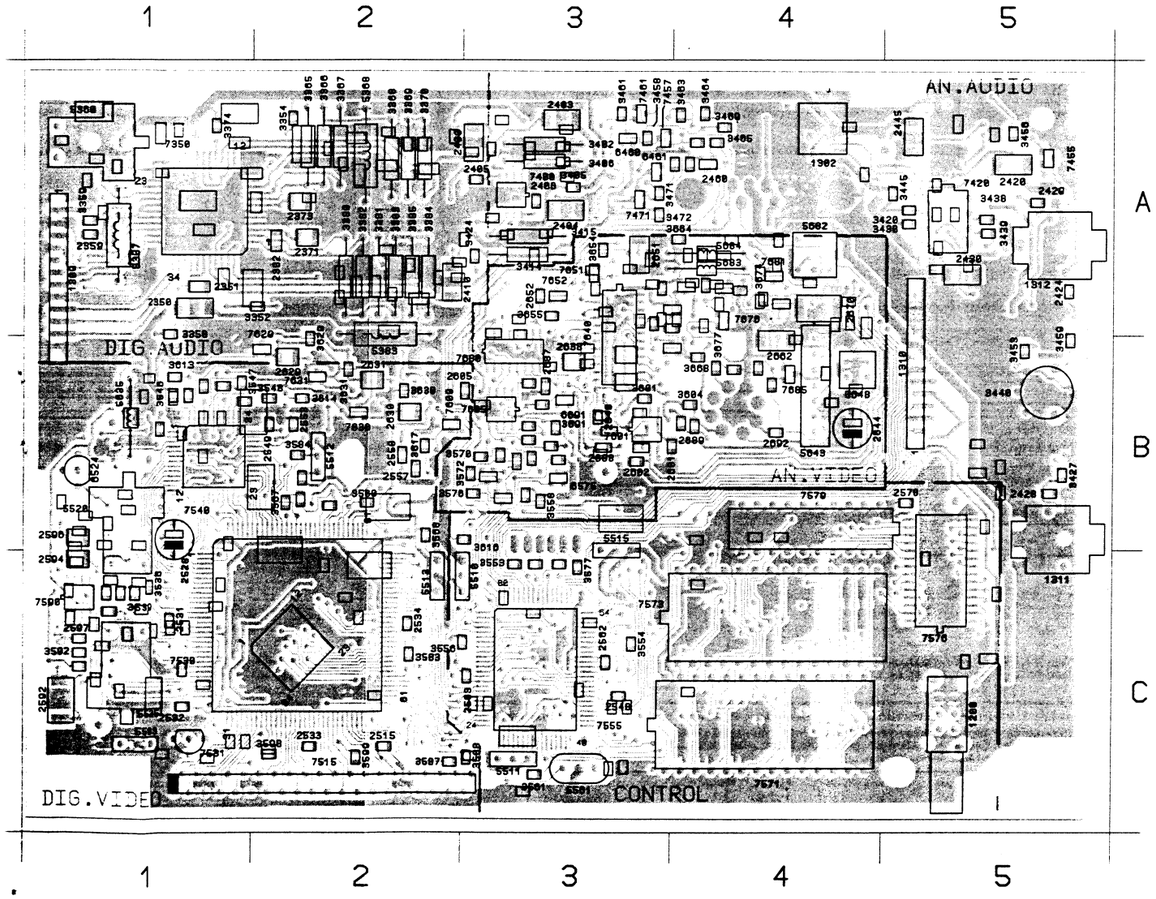

7573 C 4	5648 B 4	3678 B 4	3637 B 3	3586 B 4	3555 B 3	3464 A 4	3422 A 3	3377 A 2	2683 A 3	2601 B 3	2543 B 1	2504 C 1	2375 A 1	1200 C 5					
7574 B 3	5682 A 4	3680 A 4	3638 B 3	3587 C 2	3556 C 3	3465 A 4	3424 A 3	3378 A 2	2684 A 4	2602 B 3	2545 B 1	2507 C 2	2376 A 1	1301 B 3					
7575 B 3	5683 A 3	3681 A 4	3641 A 4	3588 C 3	3557 C 3	3469 A 4	3425 A 3	3379 A 2	2685 A 4	2603 B 3	2547 B 1	2511 C 2	2377 A 1	1302 A 4					
7576 C 5	5684 A 3	3684 A 4	3642 B 4	3589 C 1	3558 B 3	3471 A 3	3426 A 3	3380 A 2	2686 A 3	2604 B 3	2548 C 3	2512 C 2	2380 A 2	1306 A 4					
7579 B 4	6460 A 3	3685 B 4	3643 B 4	3590 C 1	3559 C 3	3472 A 3	3427 B 5	3381 A 2	2687 B 3	2605 B 3	2549 B 2	2513 C 2	2381 A 2	1309 A 1					
7580 C 1	6461 A 3	3686 B 4	3644 B 4	3591 C 1	3560 B 2	3501 C 1	3430 A 5	3382 A 2	2688 B 3	2611 B 3	2550 B 1	2514 C 1	2382 A 2	1310 B 5					
7601 B 3	6524 B 1	3687 A 3	3645 A 3	3592 C 1	3561 C 3	3502 C 2	3438 A 5	3383 A 2	2689 B 4	2629 B 2	2551 B 1	2515 C 2	2383 A 2	1311 B 5					
7605 B 3	6575 B 3	3688 A 3	3647 B 4	3593 B 1	3563 C 3	3511 C 2	3439 A 5	3384 A 2	2690 B 4	2630 B 2	2552 B 2	2516 C 2	2384 A 2	1312 A 5					
7609 B 2	6601 B 3	3691 B 3	3649 A 4	3594 B 1	3564 C 3	3526 B 1	3440 B 5	3385 A 2	2691 B 3	2631 B 2	2553 B 2	2517 C 1	2400 A 3	1600 B 4					
7629 B 2	7350 A 1	3692 B 3	3651 A 3	3595 B 1	3565 C 3	3529 B 1	3441 A 5	3390 A 2	2692 B 4	2635 C 1	2555 B 3	2518 C 3	2402 A 3	2350 A 1					
7630 B 2	7400 A 3	3693 B 3	3652 A 3	3596 C 3	3566 C 3	3530 C 1	3442 A 5	3391 A 2	3350 A 1	2636 B 1	2557 B 2	2519 B 1	2403 A 3	2351 A 1					
7631 B 2	7420 A 5	3694 B 3	3653 A 3	3597 B 1	3567 B 2	3531 C 1	3443 A 5	3392 A 2	3352 A 2	2638 B 3	2558 B 2	2521 C 1	2404 A 3	2352 A 2					
7640 B 3	7445 B 5	3695 B 3	3654 A 3	3598 C 2	3568 B 2	3532 C 1	3444 A 5	3393 A 2	3354 A 2	2640 B 3	2561 C 3	2522 B 1	2405 A 3	2353 A 1					
7651 A 3	7446 C 5	3696 B 3	3655 A 3	3599 C 2	3569 C 1	3533 C 1	3445 A 5	3394 A 2	3356 A 1	2641 A 3	2562 C 3	2523 C 1	2406 A 3	2354 A 2					
7652 A 3	7450 A 5	5357 A 1	3657 A 3	3601 B 3	3570 B 3	3534 C 1	3447 B 5	3395 A 2	3357 A 1	2643 A 3	2563 C 3	2524 C 1	2410 A 2	2355 A 1					
7662 A 4	7452 A 3	5360 A 1	3658 A 3	3602 B 3	3571 B 3	3535 C 1	3448 C 5	3400 A 3	3358 A 1	2644 B 4	2569 C 1	2525 C 1	2414 A 3	2356 A 1					
7665 A 3	7455 A 5	5366 A 2	3661 A 4	3603 B 3	3572 B 3	3536 C 1	3450 A 4	3401 A 3	3359 A 1	2645 B 3	2571 C 4	2526 B 1	2420 A 5	2357 A 1					
7666 B 3	7457 A 3	5383 A 2	3662 A 4	3604 B 4	3573 B 3	3537 C 1	3451 A 5	3402 A 3	3360 A 1	2648 B 3	2573 C 4	2527 C 1	2421 B 5	2358 A 1					
7672 A 4	7460 A 4	5503 C 1	3663 A 4	3605 B 3	3574 B 3	3538 C 1	3452 A 3	3403 A 3	3361 A 1	2651 A 3	2575 B 2	2528 B 1	2422 A 5	2359 A 1					
7675 A 4	7461 A 3	5510 C 3	3664 A 4	3613 B 1	3575 B 3	3539 C 1	3453 B 5	3404 A 2	3365 A 2	2652 A 3	2576 C 5	2530 B 1	2423 B 5	2360 A 1					
7676 A 4	7470 A 3	5511 C 3	3665 A 3	3614 B 2	3576 B 3	3541 C 3	3455 A 4	3405 A 3	3366 A 2	2661 A 3	2578 B 5	2531 C 1	2424 A 5	2361 A 1					
7680 B 3	7471 A 3	5512 B 2	3667 A 4	3615 B 1	3577 C 3	3542 C 3	3456 A 5	3406 A 3	3367 A 2	2662 B 4	2585 C 3	2532 C 1	2428 B 5	2365 A 2					
7681 A 4	7511 C 2	5513 C 2	3668 B 4	3616 B 3	3578 C 3	3545 B 1	3457 A 3	3410 A 2	3368 A 2	2663 A 3	2586 B 4	2533 C 2	2429 A 5	2366 A 2					
7685 B 4	7515 C 1	5515 B 3	3670 A 4	3617 B 2	3579 B 4	3546 B 1	3458 A 3	3412 A 2	3369 A 2	2670 A 4	2592 C 1	2534 C 2	2430 A 5	2367 A 2					
	7530 C 2	5520 C 1	3672 A 4	3629 B 2	3581 C 3	3547 B 1	3459 B 5	3414 A 3	3370 A 2	2671 A 4	2594 C 1	2535 B 2	2432 A 5	2368 A 2					
	7531 C 1	5525 C 1	3673 A 4	3630 B 2	3582 B 2	3548 B 2	3460 A 4	3415 A 3	3373 A 2	2672 A 4	2595 C 1	2537 B 2	2433 C 5	2369 A 2					
	7540 B 1	5561 C 3	3674 A 4	3631 B 2	3583 C 2	3549 B 1	3461 A 3	3416 A 3	3374 A 1	2673 A 4	2596 B 1	2540 B 1	2445 A 5	2371 A 2					
	7555 C 3	5635 B 1	3675 A 4	3635 C 1	3584 B 2	3553 C 3	3462 A 4	3420 A 5	3375 A 2	2681 A 4	2597 C 1	2541 B 1	2460 A 4	2373 A 2					
	7571 C 3	5643 B 4	3677 B 4	3636 B 1	3585 C 3	3554 C 3	3463 A 4	3421 B 5	3376 A 2	2682 A 4	2598 C 1	2542 B 2	2503 C 1	2374 A 1					

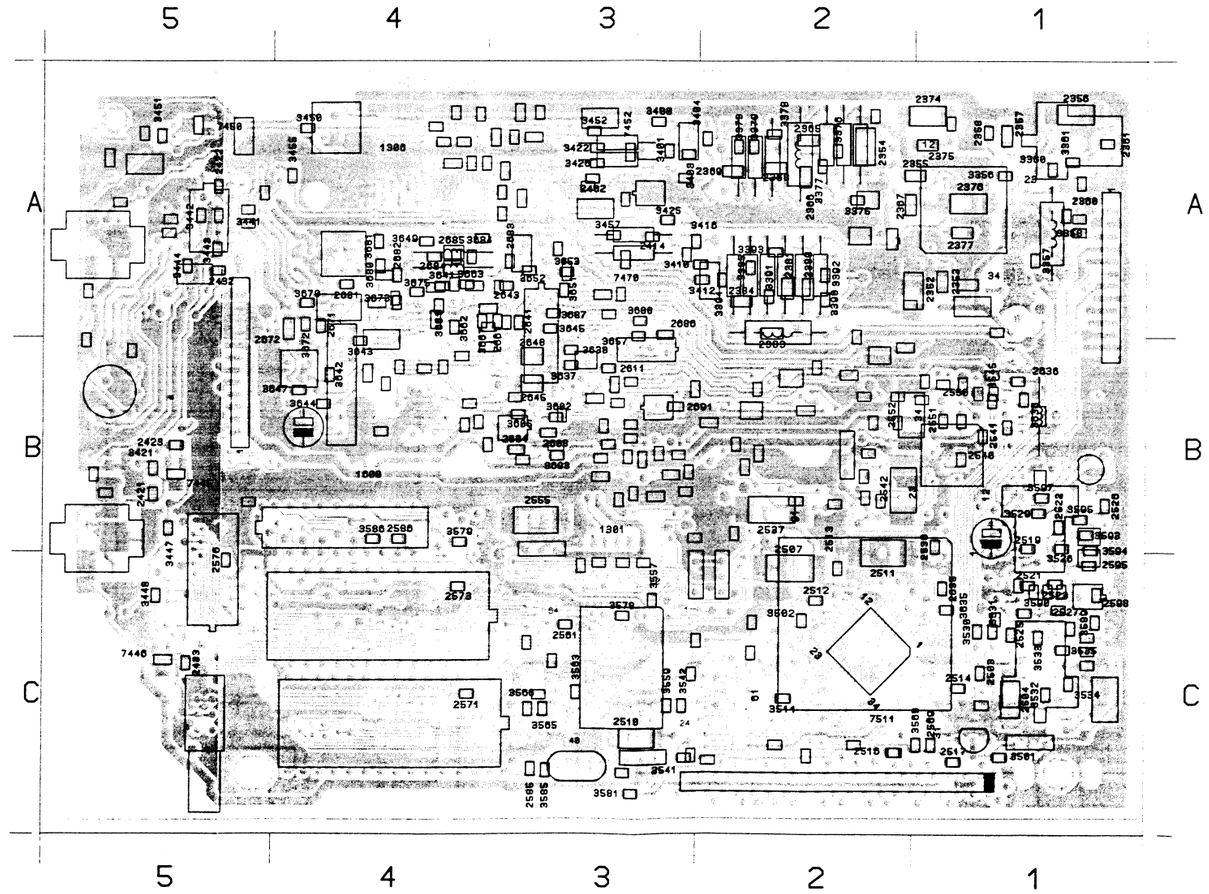

7.3.8 ANALOG VIDEO PART

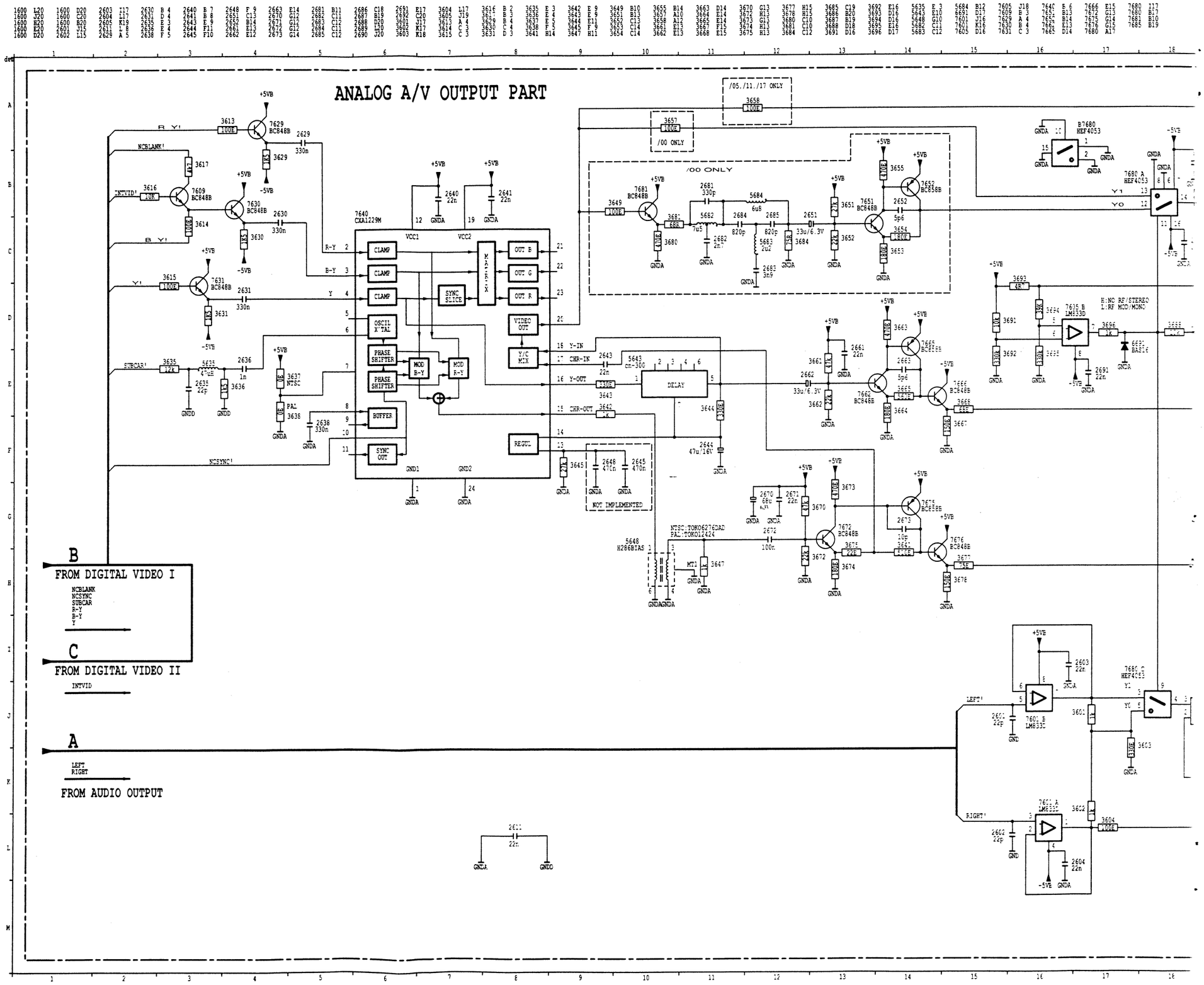

7.3.9 DISPLAY & IR DIAGRAM

E 3	5684	B12	7605	J18	7640	B 6	7666	E15	7680	I17
E10	6691	D17	7609	B 3	7651	B13	7672	G13	7680	B17
G10	7601	J16	7629	A 4	7652	B14	7675	G14	7681	B10
G11	7601	K16	7630	B 4	7662	E13	7676	G15	7685	B19
C12	7605	D16	7631	C 3	7665	D14	7680	A17		

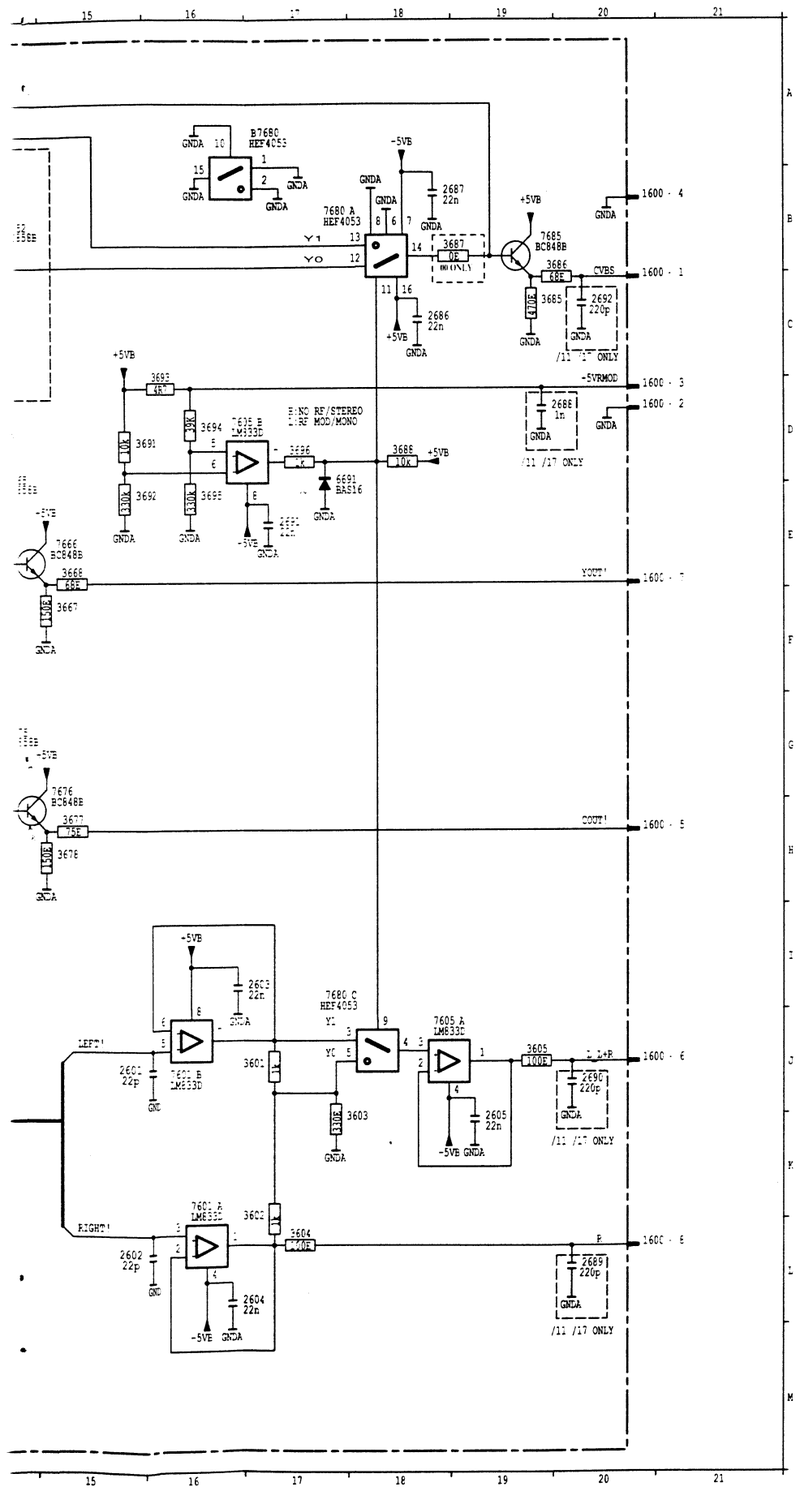

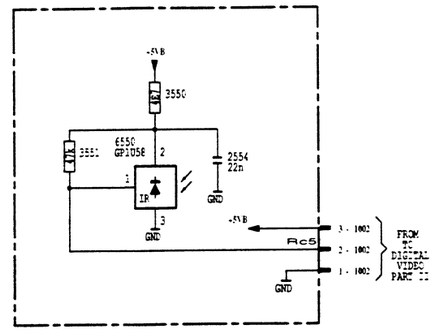

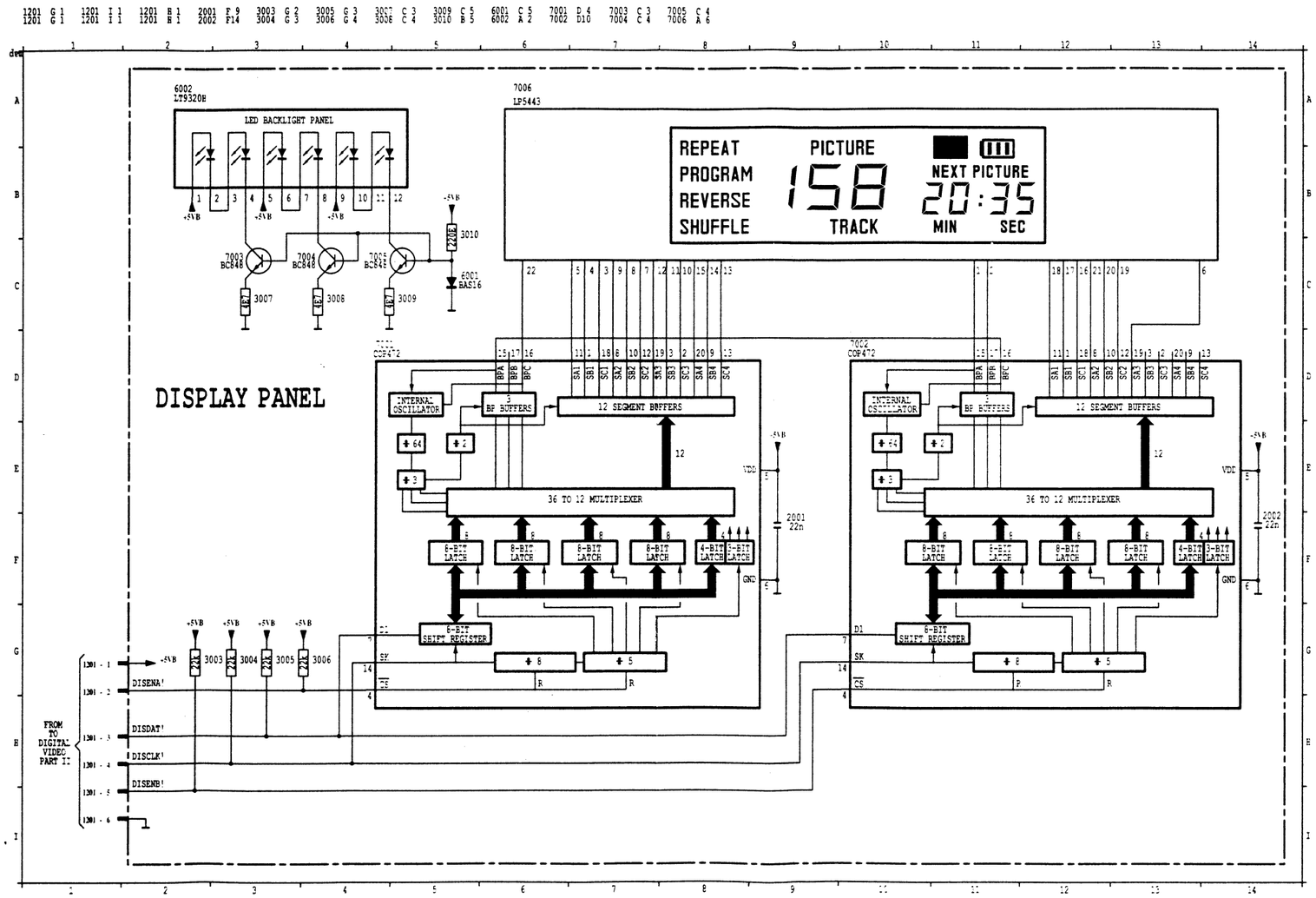
DISPLAY PANEL
6002
LT9320H
LED BACKLIGHT PANEL
7006
LP5443
REPEAT
PROGRAM
REVERSE
SHUFFLE
PICTURE
158
TRACK
NEXT PICTURE
20:35
MIN
SEC
7003
BC848
7004
BC848
7005
BC848
3007
3008
3009
3010
6001
BAS16
INTERNAL OSCILLATOR
BF BUFFERS
12 SEGMENT BUFFERS
36 TO 12 MULTIPLEXER
8-BIT LATCH
4-BIT LATCH
6-BIT SHIFT REGISTER
2001
22n
2002
22n
3003
3004
3005
3006
DISENA'
DISDAT'
DISCLK'
DISENB'
FROM TO DIGITAL VIDEO PART II

7.3.9 DISPLAY PART & IR PCB LAYOUT

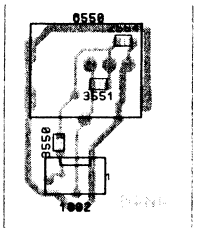

1001 B 2 3003 B 2 3006 B 2 3009 B 2 6002 A 1 7003 A 2 7006 A 1
2001 B 1 3004 B 2 3007 B 2 3010 B 2 7001 B 1 7004 A 2
2002 B 2 3005 B 2 3008 B 2 6001 B 2 7002 B 2 7005 A 2

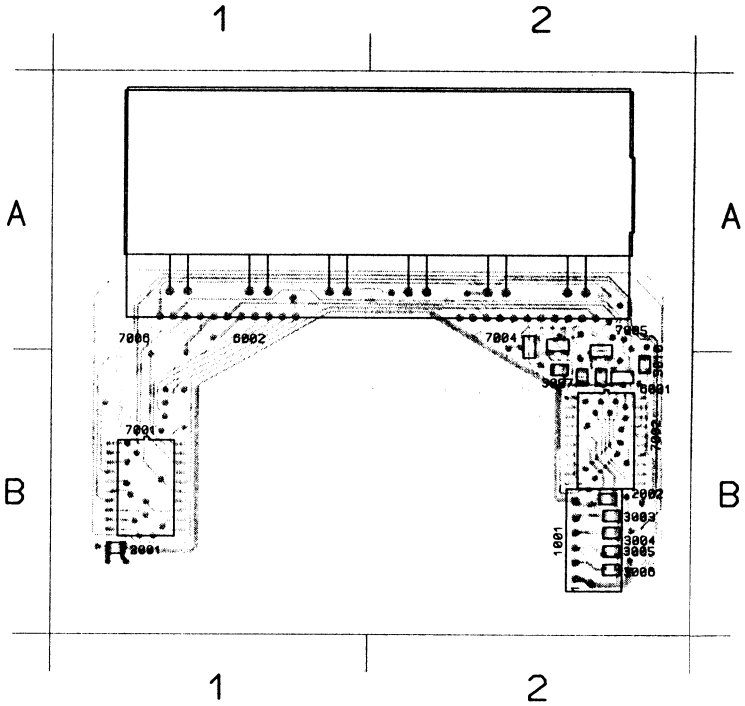

7006 A 1 7003 A 2 6002 A 1 3009 B 2 3006 B 2 3003 B 2 1001 B 2
7004 A 2 7001 B 1 3010 B 2 3007 B 2 3004 B 2 2001 B 1
7005 A 2 7002 B 2 6001 B 2 3008 B 2 3005 B 2 2002 B 2

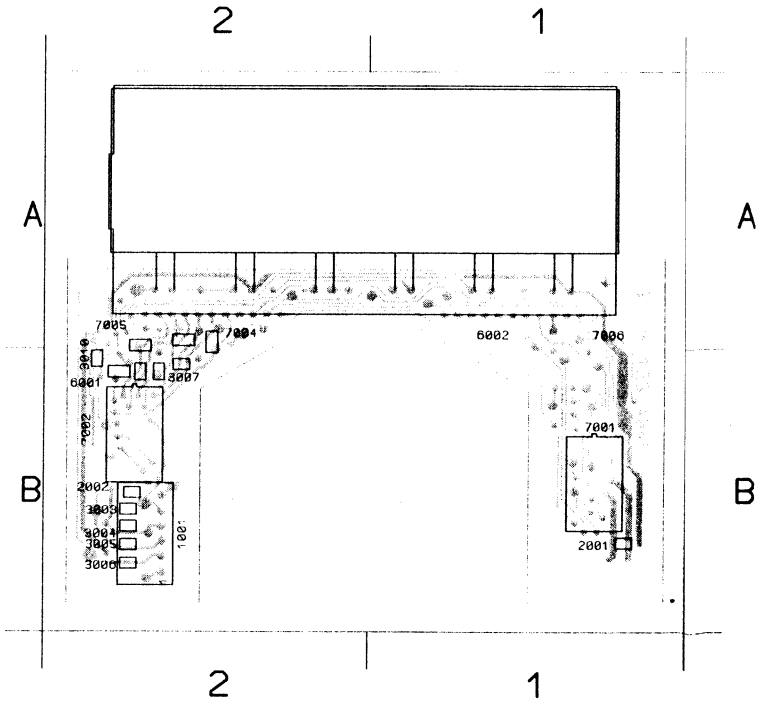

8 DIAGNOSTICS / TROUBLE SHOOTING

8.1 Measurements and adjustments

In the Photo CD player no adjustments are present ! The result of high quality state of the art is the reason that no laser current or laser offset have to be adjusted; also on the audio and video parts there are no adjustments present.

8.2 Trouble shooting / quick diagnostics

- In case of problems first make sure that the voltage used matches the voltage setting on the player unit. Refer to the type sticker of the wall adapter.
- Check of power supply.
  First check if wall adapter functions; during nominal input voltage the output must be 8.8 Volts DC.
  The supply part is located in the foot; check if all voltages are present; check +5 V and -5 V. Also check if +5 V and - 5 V are present at the servo and audio/video panel.
- Check crystal frequencies at:
  IC 7250 across pin 38, 39 and ground
  IC 7350 across pin 24, 25 and ground
  IC 7555 across pin 32, 33 and ground
  IC 7530 across pin 25, 26 and ground for PAL players.
  and across pin 27, 28 and ground for NTSC players
- Use service diagnostics to localize errors c.q. malfunctioning see chapter 6.

9.1 PERSONAL NOTES

10 PARTSLIST

1	4822 444 30465	FRAME ASSY
1	4822 444 30466	FRAME ASSY
2	4822 498 10479	HANDGRIP L ASSY
5	4822 498 10481	HANDGRIP R ASSY
8	4822 492 33385	LOCK SPRING
9	4822 410 62458	OPEN KNOB
10	4822 535 93374	DOWEL
11	4822 492 33382	TENSION SPRING
12	4822 532 52508	TRANSPIRANT RING
13	4822 450 62019	IR-WINDOW
14	4822 529 10272	DAMPER 3 ASSY
15	4822 535 10199	SILENCER
19	4822 459 11062	WORLD MARK
20	4822 444 60903	LID ASSY
21	4822 381 11391	LENS LCD
22	4822 466 93222	COVER PLATE
28	4822 466 82994	CLOSING PLATE
29	4822 532 52507	PRESSURE RING
30	4822 526 20211	MAGNEET
31	4822 402 61487	LEVER R
32	4822 492 33381	TENSION SPRING
33	4822 402 61488	LEVER L
34	4822 492 33383	LEVER SPRING L
35	4822 492 33384	LEVER SPRING R
36	4822 492 33381	TENSION SPRING
40	4822 464 50956	SUPPORT FRAME
41	4822 691 30312	CDM-9 small slot
51	4822 532 52511	SPACER A
52	4822 532 52511	SPACER A
53	4822 410 62477	KNOB UNIT ASSY
54	4822 410 62476	KNOB
55	4822 532 52512	SPACER B
56	4822 532 52512	SPACER B
57	4822 532 52513	SPACER C
58	4822 532 52513	SPACER C
59	4822 410 62482	POWER KNOB
70	4822 444 50696	BOTTOM ASSY
75	4822 256 92032	CONNECTOR SUPPORT
80	4822 462 42001	FOOT ASSY
81	4822 411 61911	LOCK
82	4822 462 71917	COVER
83	4822 444 60905	BATTERY DOOR
301	4822 272 10339	AC/DC ADAPT 120V
301	4822 272 10336	AC/DC ADAPTOR CDF100
301	4822 272 10338	AC/DC ADAPTOR
301	4822 272 10341	AC/DC ADAPTOR 100V
309	4822 736 21656	DIRECT.FOR USE
309	4822 736 21658	DIR.FOR USE(GB-F-E)
309	4822 736 21647	DIR.FOR USE(GB-NL-D)
309	4822 736 21657	DIR.FOR USE(GB-J)
310	4822 736 21648	DIR.FOR USE(F-I-E)
317	4822 321 61274	COAX CABLE
318	4822 218 10478	IRT ASSY RV6934/01
480	4822 466 62109	TRANSPORT PATH
1010		MODULATOR MDQK6
		SBC5201
1105	4822 267 50838	CON FOIL 14P 0.35597
1107	4822 265 20622	CON BMT 2P RFK5 MALE
1109	4822 267 51218	CON BMT 12P BMT FEM
1121	4822 276 13383	SWI SIGN 12V DC 50MA
1123	4822 276 13383	SWI SIGN.12VDC 50MA
1124	4822 276 13383	SWI SIGN.12VDC 50MA
1125	4822 276 13383	SWI SIGN.12VDC 50MA
1126	4822 276 13383	SWI SIGN.12VDC 50MA
1200	4822 276 11301	SWI SPJ 322 TYPE E
1301	4822 265 31067	CON.BMT MALE 6P
1302	4822 265 31066	CON.BMT MALE 3P
1306	4822 265 41291	CON.SUB D 9P MALE
1309	4822 265 41289	CON.BMT MALE 12P
1310	4822 265 41289	CON.BMT MALE 12P
1311	4822 267 51223	SOC.PHE HOR FEM 12P
1600	4822 267 51222	CON BMT 8P VERT FEM
2206	4822 124 11349	TANCAP SMCE 6V3 33U
2212	4822 124 11348	TANCAP SMCE 10V 2U2
2251	4822 124 11349	TANCAP SMCE 6V3 33U
2350	4822 124 11349	TANCAP SMCE 6V3 33U
2400	4822 124 11349	TANCAP SMCE 6V3 33U
2403	4822 124 11349	TANCAP SMCE 6V3 33U
2410	4822 124 11349	TANCAP SMCE 6V3 33U
2420	4822 124 11349	TANCAP SMCE 6V3 33U
2445	4822 124 11349	TANCAP SMCE 6V3 33U
2504	4822 124 11349	TANCAP SMCE 6V3 33U
2507	4822 124 11351	TANCAP SMCE 6V3 68U
2511	4822 124 11351	TANCAP SMCE 6V3 68U
2542	4822 124 11351	TANCAP SMCE 6V3 68U
2552	4822 124 11351	TANCAP SMCE 6V3 68U
2592	4822 124 11351	TANCAP SMC 6V3 68U
2594	4822 126 12549	CERC CH 479N X7R
2651	4822 124 11349	TANCAP SMCE 6V3 33U
2662	4822 124 11349	TANCAP SMCE 6V3 33U
2670	4822 124 11351	TANCAP SMCE 6V3 68U
2708	4822 124 11349	TANCAP SMC 6V3 33U
2755	4822 124 11349	TANCAP SMC 6V3 33U
3591	4822 051 20103	SMC RST 10K MCR10
3592	4822 051 20103	SMC RST 10K MCR10
5510	4822 157 70378	FIL EMI DC 16V S 22N
5511	4822 157 70378	FIL EMI DC 16V S 22N
5512	4822 157 70378	FIL EMI DC 16V S 22N
5513	4822 157 70378	FIL EMI DC 16V S 22N
5515	4822 157 70378	FIL EMI DC 16V S 22N
5520	4822 242 81206	XTAL 10.6875 MHZ
5520	4822 242 81203	XTAL 16.363634MHZ
5525	4822 242 81205	XTAL 8.8672375 MHZ
5525	4822 242 81202	XTAL 7.159090MHZ
5561	5322 242 73697	CER.RES.8MHZ CST8.00
5635	4822 157 53906	FXDIND A2 47MUH PM10
5643	4822 320 40295	DEL.LINE 300 PM15NS
5648	4822 157 70376	FIX.FIL.4MHZ43 5VUS
5648	4822 157 70377	IND VAR 7MM 7PS 83U4
5682	4822 157 70375	IND VAR 7MM TF-7 7U5
5683	4822 157 62552	FXDIND A02 2MUH2
5684	4822 157 60123	FXDIND.A 02 2MUH2
5751	4822 157 70374	IND FXD 8RHT S 10U
6001	5322 130 31928	SMD DIODE BAS16
6002	4822 130 91219	DISP LT9320H2(SRPJ)
6460	4822 130 81375	DIO REG BZX 84-C3V9
6461	4822 130 33703	DIO REG BZX 84-C2V4
6524	4822 130 31129	DIODE BB212
6575	5322 130 31928	SM DIODE BAS16
6691	5322 130 31928	SM DIODE BAS16
6700	5322 130 31928	SM DIODE BAS16
6701	5322 130 31928	SM DIODE BAS16
6702	5322 130 31928	SM DIODE BAS16
6716	5322 130 31928	SM DIODE BAS16
6741	5322 130 31928	SM DIODE BAS16
6745	4822 130 33004	SM DIO BZX84-B5V6
6746	5322 130 31928	SM DIODE BAS16
6750	4822 130 31982	DIODE BYV27-00
6751	4822 130 31982	DIODE BYV27-00
6761	5322 130 31928	SM DIODE BAS16
6762	4822 130 80622	SM DIODE BAT54
6764	5322 130 31928	SM DIODE BAS16
6765	5322 130 31928	SM DIODE BAS16
7001	4822 209 62209	IC COP472WM-3
7005	5322 130 41982	SM TRANS BC848B
7003	5322 130 41982	SM TRANS BC848B
7004	5322 130 41982	SM TRANS BC848B
7005	5322 130 41982	SM TRANS BC848B
7006	4822 130 91222	LCD LPH-5443-B
7050	4822 209 73234	IC TDA 8808T/C3
7064	4822 130 42696	SM TRANS BC 818-25
7076	4822 209 62059	IC TCA 0372DP1
7100	4822 209 31973	IC TDA8809T/C2/S1/13
7114	5322 209 60299	IC PC74HCT00T
7120	4822 209 62059	IC TCA 0372DP1
7135	5322 130 41983	SM TRANS BC858B(UAW)
7140	5322 130 41983	SM TRANS BC858B(UAW)
7200	4822 209 70422	IC MN264-15
7205	4822 209 61759	IC SAA7310GP/H5
7207	4822 130 42131	SM TRANS BF550
5209	5322 130 41982	SM TRANS BC848B(UAW)
7216	5322 130 41982	SM TRANS BC848B(UAW)
7250	4822 209 32124	IC MC68HSC05C8
7260	5322 130 41983	SM TRANS.BC858B(UAW)
7261	5322 130 41982	SM TRANS BC848B(UAW)
7350	4822 209 30706	IC SAA7321GP/M5
7400	4822 209 30095	SM IC LM833D
7420	4822 209 62059	IC TCA 0372DP1
7445	4822 130 42696	SM TRANS BC 818-25
7446	4822 130 42696	SM TRANS BC 818-25
7450	4822 130 42696	SM TRANS BC 818-25
7452	4822 130 42696	SM TRANS BC 818-25
7455	4822 130 42696	SM TRANS BC 818-25
7457	5322 130 41982	SM TRANS BC848B(UAW)
7460	5322 130 41982	SM TRANS BC848B(UAW)
7461	5322 130 41983	SM TRANS.BC858B(UAW)
7470	4822 130 42696	SM TRANS BC818-25
7471	5322 130 41983	SM TRANS.BC858B(UAW)
7511	4822 209 32111	IC CDBD
7590	4822 209 30095	SM IC LM8330
7630	5322 130 41982	SM TRANS BC848B(UAW)
7631	5322 130 41982	SM TRANS BC848B(UAW)
7640	5322 130 41983	SM TRANS BC858B(UAW)
7640	4822 209 32112	SM IC CXA1229M
7651	5322 130 41982	SM TRANS BC848B(UAW)
7652	5322 130 41983	SM TRANS.BC858B(UAW)
7662	5322 130 41982	SM TRANS BC848B(UAW)
7665	5322 130 41983	SM TRANS.BC858B(UAW)
7666	5322 130 41982	SM TRANS BC848B(UAW)
7672	5322 130 41982	SM TRANS BC848B(UAW)
7675	5322 130 41983	SM TRANS.BC858B(UAW)
7676	5322 130 41982	SM TRANS BC848B(UAW)
7680	5322 209 14481	IC HEF4053BT
7681	5322 130 41982	SM TRANS BC848B(UAW)
7685	5322 130 41982	SM TRANS BC848B(UAW)
7700	4822 130 63234	SM TRANS BDS948
7703	5322 130 41982	SM TRANS BC848B(UAW)
7704	5322 130 41983	SM TRANS.BC858B(UAW)
7706	5322 130 41982	SM TRANS BC848B(UAW)
7710	5322 130 41983	SM TRANS.BC858B(UAW)
7711	5322 130 41982	SM TRANS BC848B(UAW)
7714	5322 130 41982	SM TRANS BC848B(UAW)
7716	5322 209 11526	IC HEF4060BT
7724	5322 130 41982	SM TRANS BC848B(UAW)
7725	5322 130 41983	SM TRANS.BC858B(UAW)
7726	5322 130 41983	SM TRANS.BC858B(UAW)
7728	4822 209 32123	SM IC LM3578AM
7744	4822 130 63233	FET BUK543-60B
7744	4822 130 63233	FET BUK543-60B
7755	4822 209 11079	IC MC79MO5CT
7760	5322 130 41983	SM TRANS BC858B
7761	5322 130 41982	SM TRANS BC848B(UAW)
7762	5322 130 41982	SM TRANS BC848B(UAW)
7763	5322 130 41982	SM TRANS BC848B(UAW)
7780	5322 130 41983	SM TRANS BC858B(UAW)
7780	5322 130 41983	SM TRANS BC858B